Owner's Manual & Safety Instructions

Save This Manual Keep this manual for the safety warnings and precautions, assembly, operating, inspection, maintenance and cleaning procedures. Write the product's serial number in the back of the manual near the assembly diagram (or month and year of purchase if product has no number). Keep this manual and the receipt in a safe and dry place for future reference.

REV 16b

CENTRAL MACHINERY®

6 TON A-FRAME BENCH SHOP PRESS

Visit our website at: http://www.harborfreight.com
Email our technical support at: productsupport@harborfreight.com

ITEM 01666

When unpacking, make sure that the product is intact and undamaged. If any parts are missing or broken, please call 1-888-866-5797 as soon as possible.

Copyright© 1997 by Harbor Freight Tools®. All rights reserved.
No portion of this manual or any artwork contained herein may be reproduced in any shape or form without the express written consent of Harbor Freight Tools.
Diagrams within this manual may not be drawn proportionally. Due to continuing improvements, actual product may differ slightly from the product described herein. Tools required for assembly and service may not be included.

⚠WARNING

Read this material before using this product. Failure to do so can result in serious injury. SAVE THIS MANUAL.

Table of Contents

Safety 2
Specifications 3
Assembly 5
Operation 8
Maintenance 9
Parts List and Assembly Diagram..... 11
Warranty 12

WARNING SYMBOLS AND DEFINITIONS	
⚠	This is the safety alert symbol. It is used to alert you to potential personal injury hazards. Obey all safety messages that follow this symbol to avoid possible injury or death.
⚠ DANGER	Indicates a hazardous situation which, if not avoided, will result in death or serious injury.
⚠ WARNING	Indicates a hazardous situation which, if not avoided, could result in death or serious injury.
⚠ CAUTION	Indicates a hazardous situation which, if not avoided, could result in minor or moderate injury.
NOTICE CAUTION	Addresses practices not related to personal injury.

Specific Safety Rules

1. Keep hands away from arbor plates and press pin during use.
2. Do not move workpiece while compressed.
3. Release load before service or maintenance.
4. Keep area under arbor plates clear. If arbor plates rest on obstruction (i.e. bolt, debris, etc.), it creates an uneven press, causing excess stress and possible breakage.
5. Avoid off-center loads. Do not operate if workpiece tilts or binds during compression.
6. STOP and release compression if you suspect imminent structural failure. If safe, inspect thoroughly and reposition before proceeding.
7. Do not compress springs or other elastic objects. They could disengage hazardously.
8. Wear ANSI-approved safety goggles, heavy-duty work gloves, and steel-toe work boots during set up and/or use.
9. Keep bystanders out of work area.
10. Do not stand directly in front of the press when loaded. Do not leave the press unattended when loaded.
11. Do not operate the hydraulic ram beyond rated capacity.
12. Inspect before every use; do not use if parts are loose or damaged.
13. Ram service must be performed only by qualified repair personnel. Service or maintenance performed by unqualified personnel could result in a risk of injury.
14. When servicing a ram, use only identical replacement parts – refer to attached, product-specific parts list and diagram. Follow instructions in the "User - Maintenance Instructions" section of this manual. Use of unauthorized parts or failure to follow maintenance instructions may create a risk of injury.

15. Only use with accessories rated to handle the forces exerted by this tool during operation. Other accessories not designed for the forces generated may break and forcefully launch pieces.

16. Use only with ram included with this press.

17. Industrial applications must follow OSHA requirements.

18. This product is not a toy. Keep it out of reach of children.

19. Maintain labels and nameplates on the Shop Press. These carry important safety information. If unreadable or missing, contact Harbor Freight Tools for a replacement.

20. The warnings, precautions, and instructions discussed in this instruction manual cannot cover all possible conditions and situations that may occur. It must be understood by the operator that common sense and caution are factors which cannot be built into this product, but must be supplied by the operator.

SAVE THESE INSTRUCTIONS.

Specifications

Maximum Capacity	6 Tons (12,000 lb)
Working Distance	2" - 4"
Press Pin Diameter	Ø5/8"

Note: For additional information regarding the parts listed in the following pages, refer to the *Parts List and Assembly Diagram* near the end of this manual.

Components and Controls

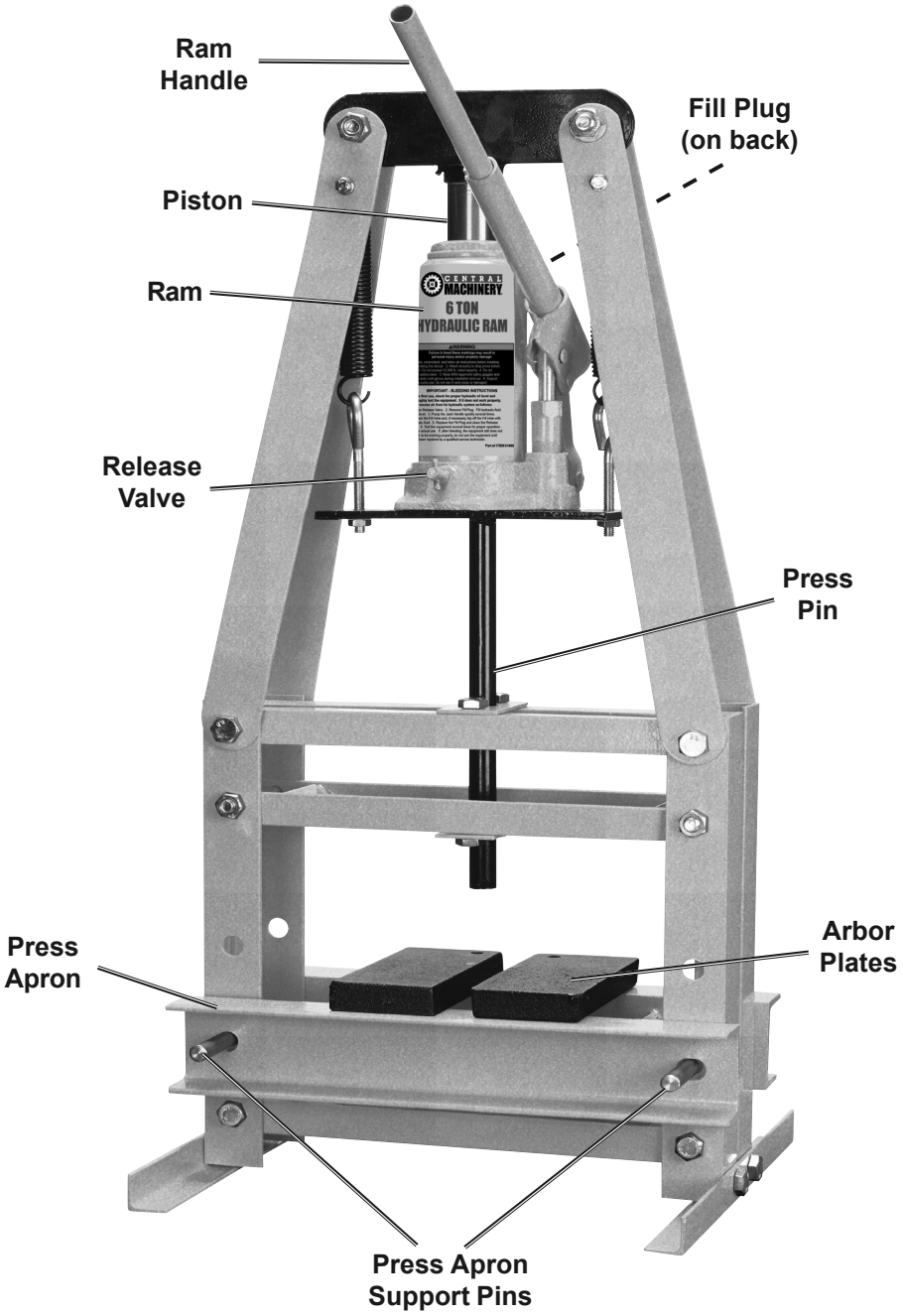

Figure A

Assembly Instructions

Read the ENTIRE IMPORTANT SAFETY INFORMATION section at the beginning of this manual including all text under subheadings therein before set up or use of this product.

Inspect tool before use, looking for damaged, loose, and missing parts. If any problems are found, do not use tool until repaired.
Wear ANSI-approved safety goggles, heavy-duty work gloves, and steel-toe work boots during set up and/or use.

Note: Finger tighten all connections until assembly is done, unless instructed otherwise.
Assemble on a flat, level, hard surface.
Use a helper when necessary.

1. Attach Back (5) and Front (9) Posts to Foot (8) with two sets of Bolts (16), Spring Washers (21), and Nuts (24).

Note: Make sure holes align on Back and Front Posts.

2. Repeat for the other Posts and Foot.

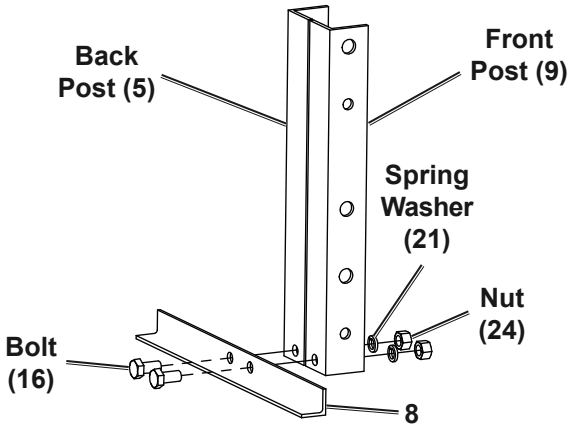

Figure B

3. Attach Spreader (7) to each side of Post assembly with two Bolts (16).

4. Repeat for other Post assembly.

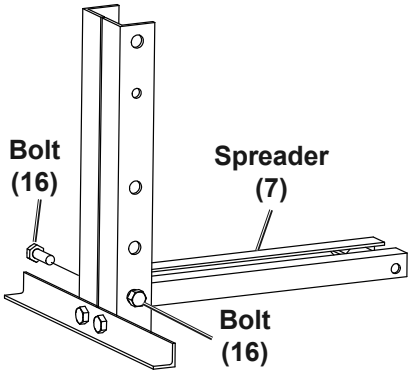

Figure C

5. Slide Press Apron (6) over Post assemblies and secure with Press Apron Support Pins (29).

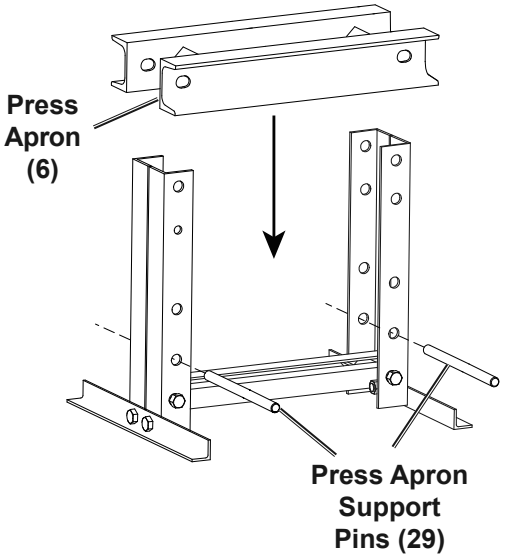

Figure D

6. Attach lower Press Pin Guide (14) to Lower Cross Beam (2) with two Bolts (16). Tighten connections securely.

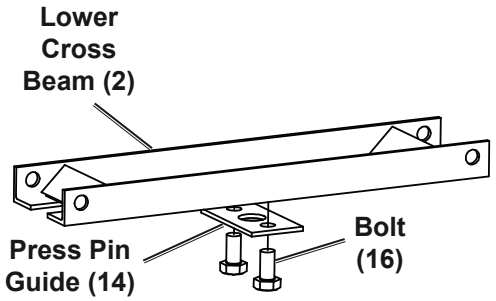

Figure E

7. Attach upper Press Pin Guide to Upper Cross Beam (4) with two Bolts (16). Tighten connections securely.

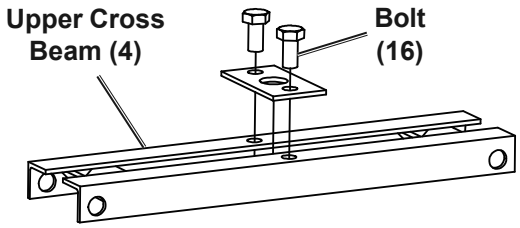

Figure F

8. Slide Lower Cross Beam assembly between Post assemblies and attach with two sets of Bolts (17), Spring Washers (21) and Nuts (24).

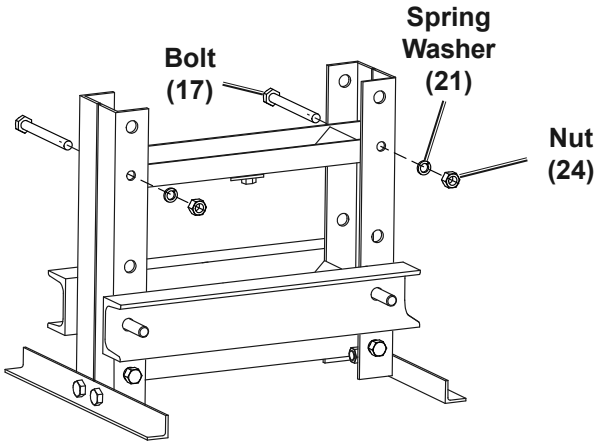

Figure G

9. Attach two Header Supports (3) together with Bolt (19), Spring Washer (23) and Nut (28), leaving a gap for the Header.

10. Repeat with other two Header Supports.

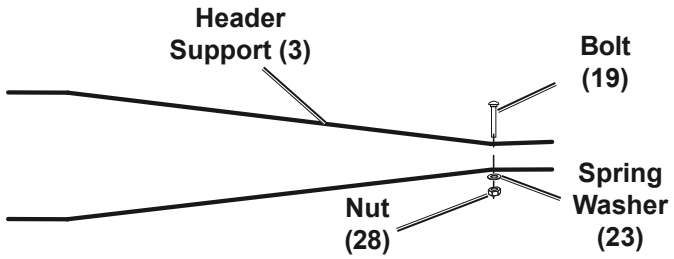

Figure H

11. Slide Header (1) between Header Support assemblies and attach with two sets of Bolts (20), Spring Washers (22) and Nuts (25).

Note: Tighten connections enough to avoid wobbling.

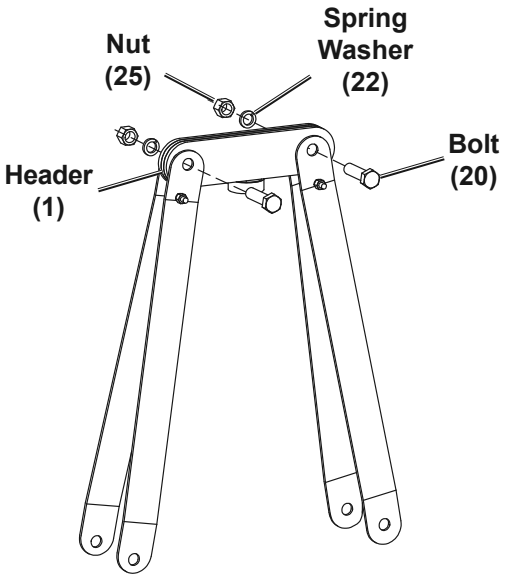

Figure I

Note: Use a helper for the next step.

12. Slide Upper Cross Beam assembly between Post assemblies and, at the same time, place Header Support assemblies outside Post assemblies.

13. Attach with two sets of Bolts (18), Spring Washers (22) and Nuts (25).

Note: Tighten connections enough to avoid wobbling.

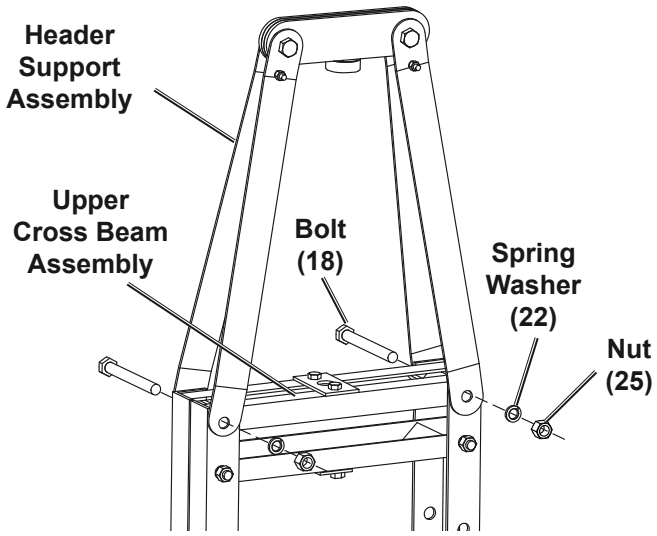

Figure J

14. Hang Springs (10) on Bolts that connect Header Supports.

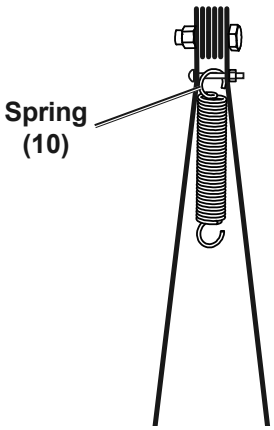

Figure K

1. Attach Eye Bolts (15) to Ram Plate (11) by threading Nuts (27) on 1/2″ only.

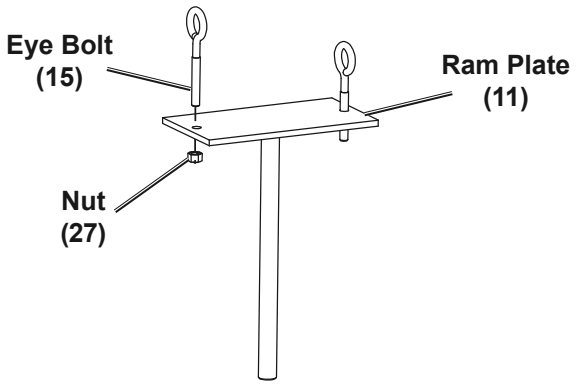

Figure L

16. Guide Press Pin through Press Pin Guides and let Ram Plate rest on Upper Cross Beam.

17. Level and square all components, then tighten all connections securely, except for Eye Bolts.

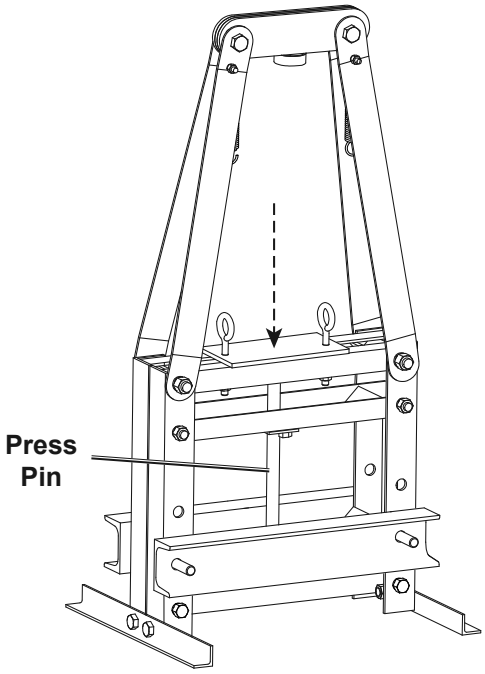

Figure M

18. Pull up on Ram Plate and attach Eye Bolts to Springs.

19. Push Ram Piston all the way down, then place Ram on Ram Plate.

Note: If more space is needed to install Ram, loosen Eye Bolts.

20. When Ram is in place, tighten Eye Bolts evenly, making sure the Ram Plate remains level.

21. Pump Ram Handle until Piston is seated firmly in Piston Ring, then tighten Eye Bolts as needed.

22. Place Arbor Plates on Press Apron.

23. Follow instructions in ***Bleeding the Ram on page 8.***

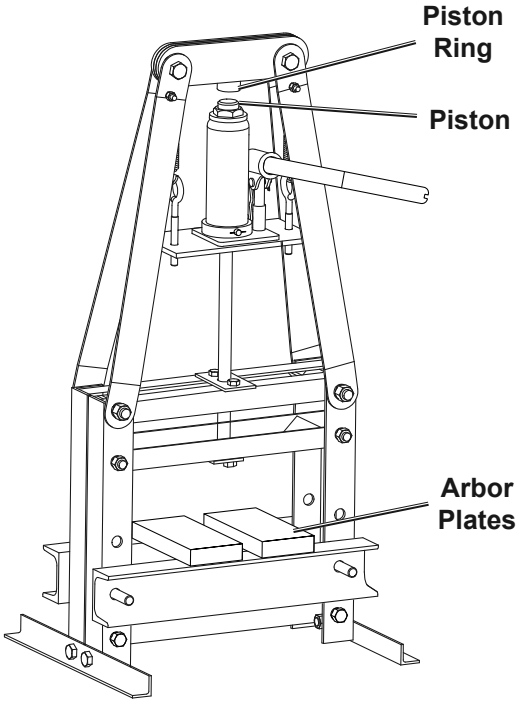

Figure N

24. Locate Shop Press on a solid, level surface, capable of supporting the weight of the Shop Press and the workpiece.

Read the ENTIRE IMPORTANT SAFETY INFORMATION section at the beginning of this manual including all text under subheadings therein before set up or use of this product.

Wear ANSI-approved safety goggles, heavy-duty work gloves, and steel-toe work boots during set up and/or use.

Bleeding the Ram

IMPORTANT! Before first use, check for proper hydraulic fluid level in the Ram. Then thoroughly test the Ram for proper operation prior to its actual use. If the Ram appears *not* to be working properly, it may be necessary to *bleed* its hydraulic system of excess air. To bleed the Ram:

1. Remove the Fill Plug.
2. Place the slot on the Ram Handle over the Release Valve.
3. Turn the Ram Handle *counterclockwise* to open the Release Valve.
4. Insert the Ram Handle into the Fulcrum, then pump the Ram Handle quickly several times.
5. Check the Fill Hole and, if necessary, top off with hydraulic fluid.
6. Place the slot on the Ram Handle over the Release Valve Screw.
7. Turn the Ram Handle *clockwise* to close the Release Valve.
8. Replace the Fill Plug.
9. Test the Ram several times before putting into use.

General Operating Instructions

1. Adjust the Press Apron height as necessary.

Note: The Press Apron should be in the highest position possible with the workpiece as close as possible to the Press Pin.

2. Place the workpiece on the Arbor Plates. Adjust the Arbor Plates to support the stationary part of the workpiece.

WARNING! Keep area under Arbor Plates clear. If Arbor Plates rest on obstruction (i.e., bolt, debris, etc.), it creates an uneven press, causing excess stress and possible breakage.

WARNING! When pressing two items together, the items must be lined up vertically. If not, one item may forcefully eject itself sideways from the unit.

3. Close the Release Valve.
4. Pump the Ram Handle until Press Pin contacts the workpiece. Continue to pump the Ram Handle to press the workpiece.
5. After work is completed, be careful when releasing Jack pressure. **Slowly** open the Release Valve, allowing the Ram Plate to rise.
6. WARNING! During the release process the Ram may rise quickly. Stay clear.
7. Store Shop Press out of reach of children.

User-Maintenance Instructions

Procedures not specifically explained in this manual must be performed only by a qualified technician.

WARNING **TO PREVENT SERIOUS INJURY FROM TOOL FAILURE: Do not use damaged equipment. If abnormal noise or vibration occurs, have the problem corrected before further use.**

1. **Before each use,** inspect the general condition of the Shop Press and Ram. Check for broken, cracked, or bent parts, loose or missing parts, and any condition that may affect the proper operation of the product. If a problem occurs, have the problem corrected before further use.
   Do not use damaged equipment.

2. **Before each use, thoroughly test the Ram for proper operation prior to its actual use. If the Ram appears *not* to be working properly, follow instructions in *Bleeding the Ram on page 8.***

3. **Change the hydraulic fluid at least once every three years. To change the hydraulic fluid:**
   a. With the Ram fully lowered, unhook the Springs from the Eye Bolts, then remove the Ram from the Ram Plate.
   b. Remove the Filler Plug.
   c. Tip the Ram to allow the old hydraulic fluid to drain out of the unit completely, and dispose of the old hydraulic fluid in accordance with local regulations.
   d. Completely fill the unit with a high quality hydraulic fluid (not included) until the fluid just begins to run out of the Fill Hole.
   e. Reinstall the Filler Plug.
   f. Clean with a clean cloth using a detergent or mild solvent.
   g. Replace the Ram onto the Ram Plate.

Troubleshooting

⚠WARNING **TO PREVENT SERIOUS INJURY:**
Use caution when troubleshooting a malfunctioning ram.
Completely resolve all problems before use. If the solutions presented in the Troubleshooting guide do not solve the problem, have a qualified technician inspect and repair the ram before use.
After the ram is repaired: Test it carefully without a load by raising it and lowering it fully, checking for proper operation, BEFORE RETURNING THE RAM TO OPERATION.

DO NOT USE A DAMAGED OR MALFUNCTIONING RAM!

POSSIBLE SYMPTOMS				PROBABLE SOLUTION (Make certain that the jack is not supporting a load while attempting a solution.)
Pump stroke feels spongy	Piston will not lift all the way	Handle moves up when ram is under load	Fluid leaking from filler plug	
				Check that Release Valve is closed fully.
		X		Valves may be blocked and may not close fully. To flush the valves: 1. Lower the piston and securely close the Release Valve. 2. Manually lift the piston several inches. 3. Open the release valve and force the piston down as quickly as possible.
X	X			Ram may be low on fluid. Check the fluid level and refill if needed.
				Ram may require bleeding - see instructions on page 8.
			X	Unit may have too much hydraulic fluid inside, check fluid level and adjust if needed.

Record Product's Serial Number Here:_____

Note: If product has no serial number, record month and year of purchase instead.

Note: Some parts are listed and shown for illustration purposes only, and are not available individually as replacement parts.

Parts List

Part	Description	Qty
1	Header	1
2	Lower Cross Beam	1
3	Header Support	4
4	Upper Cross Beam	1
5	Back Post	2
6	Press Apron	1
7	Spreader	1
8	Foot	2
9	Front Post	2
10	Springs	2
11	Ram Plate	1
12	Ram	1
13	Ram Handle	1
14	Press Pin Guide	2
15	Eye Bolt	2

Part	Description	Qty
16	Bolt (M10x20)	12
17	Bolt (M10x100)	2
18	Bolt (M12x110)	2
19	Bolt (M6x40)	2
20	Bolt (M12x45)	2
21	Spring Washer (M10)	10
22	Spring Washer (M12)	4
23	Spring Washer (M6)	2
24	Nut (M10)	10
25	Nut (M12)	4
26	Arbor Plate	2
27	Nut 8	2
28	Nut 6	2
29	Press Apron Support Pin	2

Assembly Diagram

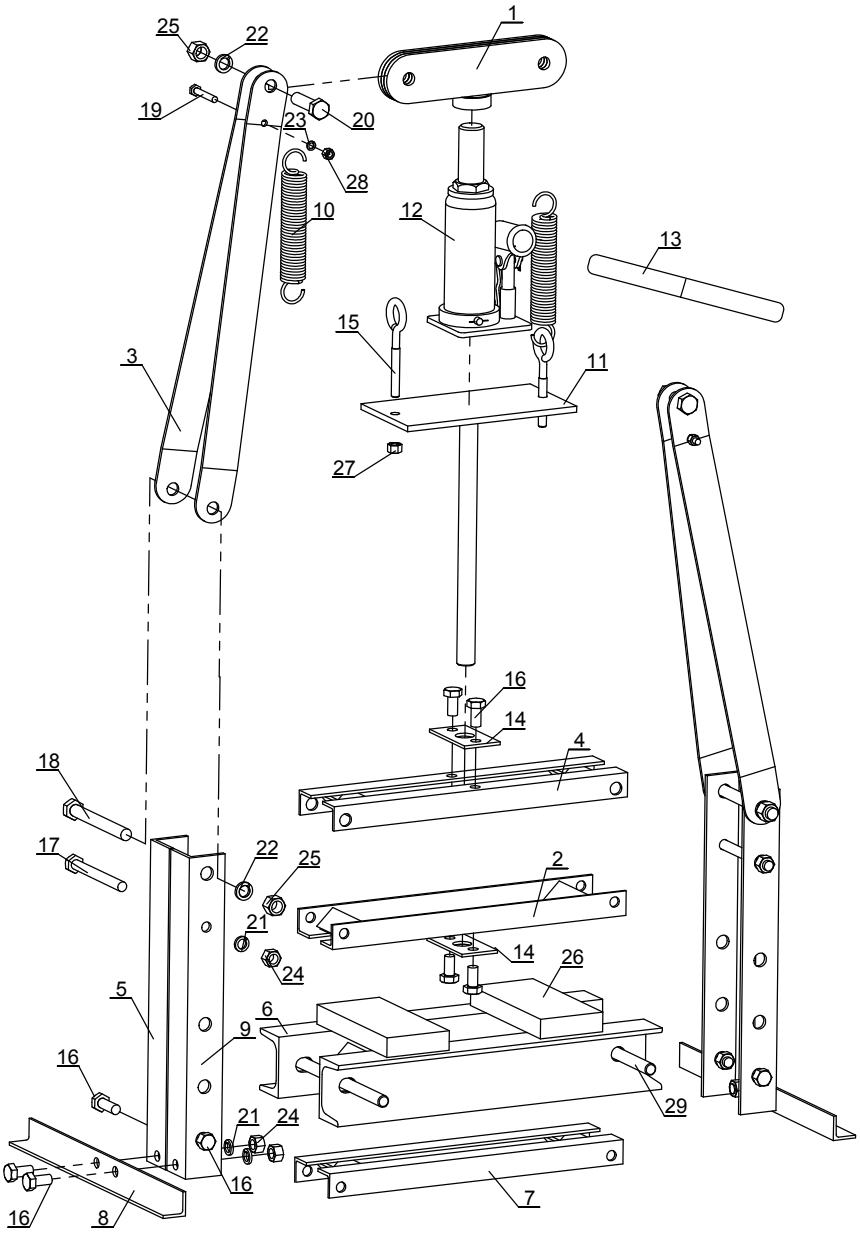

PLEASE READ THE FOLLOWING CAREFULLY

THE MANUFACTURER AND/OR DISTRIBUTOR HAS PROVIDED THE PARTS LIST AND ASSEMBLY DIAGRAM IN THIS DOCUMENT AS A REFERENCE TOOL ONLY. NEITHER THE MANUFACTURER OR DISTRIBUTOR MAKES ANY REPRESENTATION OR WARRANTY OF ANY KIND TO THE BUYER THAT HE OR SHE IS QUALIFIED TO MAKE ANY REPAIRS TO THE PRODUCT, OR THAT HE OR SHE IS QUALIFIED TO REPLACE ANY PARTS OF THE PRODUCT. IN FACT, THE MANUFACTURER AND/OR DISTRIBUTOR EXPRESSLY STATES THAT ALL REPAIRS AND PARTS REPLACEMENTS SHOULD BE UNDERTAKEN BY CERTIFIED AND LICENSED TECHNICIANS, AND NOT BY THE BUYER. THE BUYER ASSUMES ALL RISK AND LIABILITY ARISING OUT OF HIS OR HER REPAIRS TO THE ORIGINAL PRODUCT OR REPLACEMENT PARTS THERETO, OR ARISING OUT OF HIS OR HER INSTALLATION OF REPLACEMENT PARTS THERETO.

Limited 90 Day Warranty

Harbor Freight Tools Co. makes every effort to assure that its products meet high quality and durability standards, and warrants to the original purchaser that this product is free from defects in materials and workmanship for the period of 90 days from the date of purchase. This warranty does not apply to damage due directly or indirectly, to misuse, abuse, negligence or accidents, repairs or alterations outside our facilities, criminal activity, improper installation, normal wear and tear, or to lack of maintenance. We shall in no event be liable for death, injuries to persons or property, or for incidental, contingent, special or consequential damages arising from the use of our product. Some states do not allow the exclusion or limitation of incidental or consequential damages, so the above limitation of exclusion may not apply to you. THIS WARRANTY IS EXPRESSLY IN LIEU OF ALL OTHER WARRANTIES, EXPRESS OR IMPLIED, INCLUDING THE WARRANTIES OF MERCHANTABILITY AND FITNESS.

To take advantage of this warranty, the product or part must be returned to us with transportation charges prepaid. Proof of purchase date and an explanation of the complaint must accompany the merchandise. If our inspection verifies the defect, we will either repair or replace the product at our election or we may elect to refund the purchase price if we cannot readily and quickly provide you with a replacement. We will return repaired products at our expense, but if we determine there is no defect, or that the defect resulted from causes not within the scope of our warranty, then you must bear the cost of returning the product.

This warranty gives you specific legal rights and you may also have other rights which vary from state to state.

CENTRAL MACHINERY®

3491 Mission Oaks Blvd. • PO Box 6009 • Camarillo, CA 93011 • 1-888-866-5797