Owner's Manual & Safety Instructions

Save This Manual Keep this manual for the safety warnings and precautions, assembly, operating, inspection, maintenance and cleaning procedures. Write the product's Date Code in the back of the manual near the assembly diagram (or month and year of purchase if product has no number). Keep this manual and the receipt in a safe and dry place for future reference. 25d

VIKING®

12 VOLT JUMP STARTER

IMPORTANT: YOU MUST CHARGE COMPLETELY BEFORE FIRST USE, AFTER EVERY JUMP START, AND EVERY 30 DAYS OR VOIDS WARRANTY.

Visit our website at: https://www.harborfreight.com
Email our technical support at: productsupport@harborfreight.com

57044

When unpacking, make sure that the product is intact and undamaged. If any parts are missing or broken, please call 1-800-444-3353 as soon as possible.

Copyright© 2024 by Harbor Freight Tools®. All rights reserved.
No portion of this manual or any artwork contained herein may be reproduced in any shape or form without the express written consent of Harbor Freight Tools. Diagrams within this manual may not be drawn proportionally. Due to continuing improvements, actual product may differ slightly from the product described herein. Tools required for assembly and service may not be included.

⚠WARNING

Read this material before using this product. Failure to do so can result in serious injury. SAVE THIS MANUAL.

Table of Contents

Safety 2
Specifications 4
Setup 5
Operation 7
Maintenance 8
Parts List and Diagram 10
Warranty 12

WARNING SYMBOLS AND DEFINITIONS	
⚠	This is the safety alert symbol. It is used to alert you to potential personal injury hazards. Obey all safety messages that follow this symbol to avoid possible injury or death.
⚠ DANGER	Indicates a hazardous situation which, if not avoided, will result in death or serious injury.
⚠ WARNING	Indicates a hazardous situation which, if not avoided, could result in death or serious injury.
⚠ CAUTION	Indicates a hazardous situation which, if not avoided, could result in minor or moderate injury.
NOTICE CAUTION	Addresses practices not related to personal injury.

V	Volts
~	Alternating Current
A	Amperes
CCA	Cold Cranking Amps
RC	Reserve Capacity
Ah	Ampere-hours

	WARNING marking concerning Risk of Eye Injury. Wear ANSI-approved splash-resistant safety goggles.
	Read the manual before setup and/or use.
	WARNING marking concerning Risk of Fire. Follow connection procedure.

General Safety Warnings

⚠WARNING

Read all safety warnings and instructions.
Failure to follow the warnings and instructions may result in electric shock, fire and/or serious injury.
Save all warnings and instructions for future reference.

WARNING! – RISK OF EXPLOSIVE GASES.

Working in vicinity of a lead-acid battery is dangerous. Batteries generate explosive gases during normal battery operation. For this reason, it is of utmost importance that you follow the instructions each time you use the Jump Starter.

To reduce risk of battery explosion, follow these instructions and those published by battery manufacturer and manufacturer of any equipment you intend to use in vicinity of battery. Review cautionary marking on these products and on engine.

Work Area Safety

1. **Keep work area clean and well lit.** *Cluttered or dark areas invite accidents.*
2. **Do not operate Jump Starter in explosive atmospheres, such as in the presence of flammable liquids, gases or dust.** *The Jump Starter can create sparks which may ignite the dust or fumes.*
3. **Keep children and bystanders away while operating the Jump Starter.** *Distractions can cause you to lose control.*
4. **Store idle equipment.** *Always lock up tools and keep out of reach of children.*

Electrical Safety

1. **Do not drop a metal tool onto battery.** *It might spark or short-circuit battery or other electrical part that may cause explosion.*
2. **Do not operate if Jump Starter has received a sharp blow, been dropped, or otherwise damaged in any way; take it to a qualified technician.**
3. **Do not leave Jump Starter unattended while switched on.** *It could result in fire and property damage.*
4. **Do not expose to rain or wet conditions.** *Water entering the Jump Starter will increase the risk of electric shock.*
5. **Do not use an extension cord with this item.**
6. **Use of an attachment not recommended or sold by the manufacturer may result in a risk of fire, electric shock, or injury to persons.**
7. **To reduce risk of damage to electric plug and cord, pull by plug rather than cord when disconnecting the Adapter.**
8. **Do not operate with damaged cord or plug. Replace the cord or plug immediately.**

Personal Safety

1. **Wear ANSI-approved splash-resistant safety goggles and heavy-duty rubber work gloves whenever connecting, disconnecting, or working near battery. Battery acid can cause permanent blindness. Avoid touching eyes while working near battery.**
2. **Do not use Jump Starter while you are tired or under the influence of drugs, alcohol or medication.** *A moment of inattention while operating Jump Starter may result in serious personal injury.*
3. **NEVER smoke or allow a spark or flame in vicinity of battery or engine.**
4. **If battery acid contacts skin or clothing, wash immediately with soap and water. If acid enters eye, immediately flood eye with running cold water for at least 10 minutes and get medical attention immediately.**
5. **Remove personal metal items such as rings, bracelets, necklaces, and watches when working with a lead-acid battery.** *A lead-acid battery can produce a short-circuit current high enough to weld a ring or the like to metal, causing a severe burn.*
6. People with pacemakers should consult their physician(s) before use. Electromagnetic fields in close proximity to heart pacemaker could cause pacemaker interference or pacemaker failure.

Service

Have your Jump Starter serviced by a qualified repair person using only identical replacement parts.
This will ensure that the safety of the Jump Starter is maintained.

Jump Starter Safety Warnings

1. **Lead-acid batteries generate hydrogen gas when charging.** Hydrogen gas is explosive. Only use the Jump-Start system in a well-ventilated area.
2. **Jump-Starting A Vehicle**
   a. Use the Jump Starter for jump-starting a LEAD-ACID battery only.
   b. For emergency use only. Do not use the Jump Starter as a replacement for a vehicle battery.
   c. Be sure area around battery is well ventilated while battery is being jump-started.
   d. NEVER jump-start a frozen battery.
   e. Do not attempt to jump-start a vehicle with a non-rechargeable or defective battery.
   f. Study all battery manufacturer's specific precautions for jump-starting.
   g. **DO NOT TOUCH POSITIVE AND NEGATIVE BATTERY CLAMPS TOGETHER.**
   h. Unplug the Jump Starter from its Adapter before connecting its cables to a battery.
   i. Connect and disconnect battery cable clamps only after setting any Jump-Starter switches to OFF position.
   j. Connect cables to proper polarities. Connect black cable to negative body ground and red cable to positive battery terminal.
   k. Locate Jump Starter as far away from battery as battery cables permit.
3. Maintain labels and nameplates on the Jump Starter. These carry important safety information. If unreadable or missing, contact Harbor Freight Tools for a replacement.
4. The warnings, precautions, and instructions discussed in this instruction manual cannot cover all possible conditions and situations that may occur. It must be understood by the operator that common sense and caution are factors which cannot be built into this product, but must be supplied by the operator.

SAVE THESE INSTRUCTIONS.

Specifications

Input	100-120VAC, 60Hz, 0.6A
Output	12VDC, 2.0A
Cold Cranking Amps	500A
Battery	12V, 22Ah, Sealed Lead-Acid
Battery Cables	55" L, 2AWG
Functions: 12VDC Jump-Starter, 12VDC Power Supply, 5VDC 2.4A USB Port, LED Work Light	

FCC Statement

Changes or modifications not expressly approved by Harbor Freight Tools could void the user's authority to operate the equipment.

NOTE: This equipment has been tested and found to comply with the limits for a Class B digital device, pursuant to part 15 of the FCC Rules. These limits are designed to provide reasonable protection against harmful interference in a residential installation. This equipment generates uses and can radiate radio frequency energy and, if not installed and used in accordance with the instructions, may cause harmful interference to radio communications. However, there is no guarantee that interference will not occur in a particular installation. If this equipment does cause harmful interference to radio or television reception, which can be determined by turning the equipment off and on, the user is encouraged to try to correct the interference by one or more of the following measures:

- Reorient or relocate the receiving antenna.
- Increase the separation between the equipment and receiver.
- Connect the equipment into an outlet on a circuit different from that to which the receiver is connected.
- Consult the dealer or an experienced radio/TV technician for help.

Setup - Before Use:

Read the <u>ENTIRE</u> IMPORTANT SAFETY INSTRUCTIONS section at the beginning of this manual including all text under subheadings therein before setup or use of this product.

<u>Note:</u> For additional information regarding the parts listed in the following pages, refer to *Parts List and Diagram* on page 11.

Functions

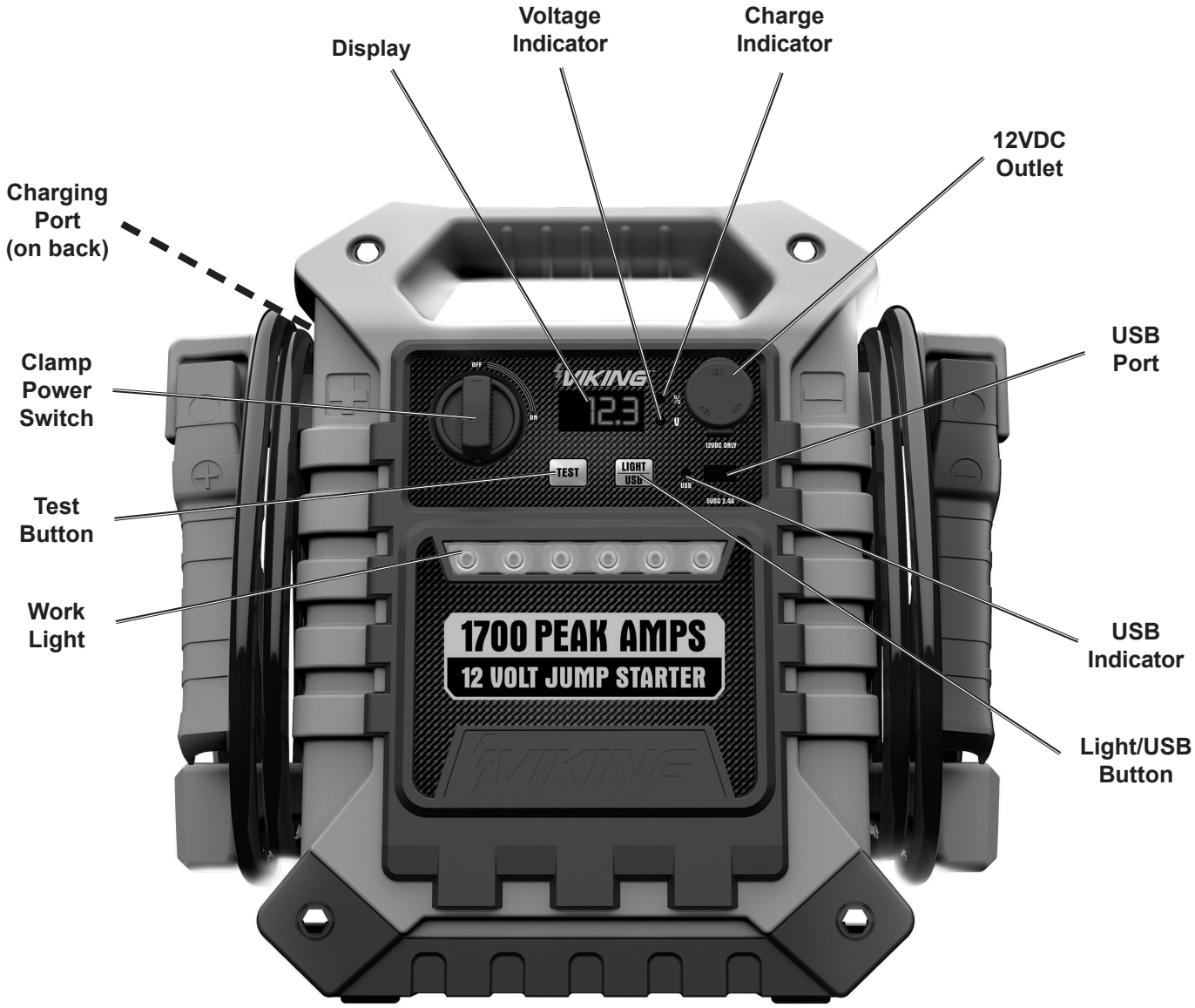

Charging the Jump Starter

IMPORTANT: YOU MUST CHARGE COMPLETELY BEFORE FIRST USE, AFTER EVERY JUMP START, AND EVERY 30 DAYS OR VOIDS WARRANTY.

WARNING! TO PREVENT SERIOUS INJURY: Charge on a non-flammable surface.

1. Press TEST Button to check battery level.

Note: % and V Indicators will alternately flash. Charge battery if level is 50% or lower.

2. Turn the Clamp Power Switch off.
3. Turn Work Light and USB off. Disconnect any device connected to the USB Port.
4. Plug the Charging Cord into a grounded 120VAC outlet.
5. Plug other end into Charging Port.
6. While charging, ***CHA*** will appear on the Display alternating with the battery level percentage. When charging is complete ***FUL*** will appear on the Display.
7. When the Jump Starter is fully charged, unplug Charging Cord from the outlet and the unit.

DC Appliance Compatibility

The Jump Starter can power 12VDC appliances that draw 15 Amps (180 Watts) or less.

The lower the watts the appliance uses, the longer the Jump Starter can power it before needing to be recharged.

Calculate the total wattage needed to run the appliance before operation. You do not need to calculate startup or surge wattages.

To calculate the size of the load you plan to use with the Jump Starter, use the following formula:

Amps x Volts = Watts

For example, if you use an appliance whose running amps total 7 amps, you will need 84 watts of power **(7 amps x 12 volts = 84 Watts)** to run the item. This figure is within the capacity of the unit.

Note: Use this chart as a guideline only.

The actual power usage may vary based on the model or brand of the appliance. Check the actual wattage of your appliances and calculate the amount of power needed to run/charge them.

Appliance	Estimated Power (watts)	Estimated Use (hours)
Fluorescent Light Cell Phone Charger	4	50
Radio, Fan Depth Finder	9	26
Video Recorder Spotlight	15	14
Small Power Tool Bilge Pump	24	8
Electric Cooler	48	3
Air Compressor	80	2

Using the Work Light

1. Press and hold the LIGHT/USB Button approximately 3 seconds to turn the Work Light on in bright mode.
2. Press the Button repeatedly to cycle through low, flashing, rapid flashing, and SOS modes.
3. To turn the Work Light off, press the LIGHT/USB Button.

Jump-Starting a Vehicle

Note: Read the vehicle owner's manual pertaining to jump-starting prior to using the Jump Starter.

1. Press TEST Button to check battery level. The Jump Starter must be fully charged. Recharge as needed, according to **"Charging the Jump Starter"** section on page 6.
2. Turn off the vehicle ignition switch and all accessories (lights, radio, climate control, etc.).
3. Turn Clamp Power Switch off. You may leave the Work Light on if needed.

WARNING! TO PREVENT SERIOUS INJURY: DO NOT TOUCH POSITIVE AND NEGATIVE BATTERY CLAMPS TOGETHER.

4. Connect the red Positive Battery Cable to vehicle's positive battery terminal. Connect the black Negative Battery Cable to a non-moving metal part of the vehicle.

WARNING! TO PREVENT SERIOUS INJURY: DO NOT CONNECT TO THE NEGATIVE TERMINAL OF THE BATTERY.

Note: If the Battery Clamps are connected incorrectly, an alarm will sound and Error Code ***Er1*** will appear on the Display. Review and change the connections.

If the battery's voltage is too high, an alarm will sound and Error Code ***Er2*** will appear on the Display. Disconnect the Battery Clamps, it will not be possible to jump start with this unit.

5. When the correct connection has been made, the "external battery voltage value" will appear on the Display. Turn the Clamp Power Switch ON.
6. Attempt to start the vehicle. If the vehicle does not start within 5 seconds, turn Clamp Power Switch off and wait at least 3 minutes before trying again.
7. After the vehicle is started, turn the Clamp Power Switch off. Remove the black Negative Battery Cable first, and then the red Positive Battery Cable.
8. Recharge the Jump Starter.

Powering DC Appliances

1. Press TEST Button to check battery level. Recharge as needed, according to ***Charging the Jump Starter*** on page 6.
2. Make sure the total wattage of the appliance is within the range of the Jump Starter. See ***DC Appliance Compatibility*** on page 6.
3. Turn Clamp Power Switch off. Turn appliance off.
4. Plug appliance into the 12VDC Outlet, then turn on. When finished, turn off then unplug appliance.

Charging/Powering USB Devices

1. Press TEST Button to check battery level. Recharge as needed, according to ***Charging the Jump Starter*** on page 6.
2. Plug the device into the USB Port.
3. Press the LIGHT/USB Button. The USB Indicator will illuminate.
4. When finished, press LIGHT/USB Button again. Remove the device from the USB Port.

Maintenance and Servicing

Procedures not specifically explained in this manual must be performed only by a qualified technician.

WARNING

TO PREVENT SERIOUS INJURY: Unplug the Jump Starter, turn the Power Switch off and allow Jump Starter to cool completely before performing any inspection, maintenance, or cleaning procedures.

1. **BEFORE EACH USE,** inspect the general condition of the Jump Starter. Check for:
   - loose hardware
   - cracked or broken parts
   - damaged electrical wiring or cable insulation
   - any other condition that may affect its safe operation.
2. Keep unit clean and clamps free of dirt, debris, or grease.
3. For longer working life, protect unit from sunlight and moisture.
4. **AFTER USE,** wipe external surfaces of the Jump Starter with clean cloth.

Battery Disposal

WARNING! TO PREVENT SERIOUS INJURY: CONTAINS NON-SPILLABLE, SEALED LEAD-ACID BATTERY. BATTERY MUST BE RECYCLED OR DISPOSED OF PROPERLY.

1. Remove all screws from case and open. Cut wires from battery with insulated wire clippers and remove.
2. Disposing of the Jump Starter must comply with standards for hazardous waste disposal in your area. Contact your local city government office for the nearest hazardous waste disposal area in your community.

PLEASE READ THE FOLLOWING CAREFULLY

THE MANUFACTURER AND/OR DISTRIBUTOR HAS PROVIDED THE PARTS LIST AND ASSEMBLY DIAGRAM IN THIS MANUAL AS A REFERENCE TOOL ONLY. NEITHER THE MANUFACTURER OR DISTRIBUTOR MAKES ANY REPRESENTATION OR WARRANTY OF ANY KIND TO THE BUYER THAT HE OR SHE IS QUALIFIED TO MAKE ANY REPAIRS TO THE PRODUCT, OR THAT HE OR SHE IS QUALIFIED TO REPLACE ANY PARTS OF THE PRODUCT. IN FACT, THE MANUFACTURER AND/OR DISTRIBUTOR EXPRESSLY STATES THAT ALL REPAIRS AND PARTS REPLACEMENTS SHOULD BE UNDERTAKEN BY CERTIFIED AND LICENSED TECHNICIANS, AND NOT BY THE BUYER. THE BUYER ASSUMES ALL RISK AND LIABILITY ARISING OUT OF HIS OR HER REPAIRS TO THE ORIGINAL PRODUCT OR REPLACEMENT PARTS THERETO, OR ARISING OUT OF HIS OR HER INSTALLATION OF REPLACEMENT PARTS THERETO.

Record Product's Date Code Here:_____

Note: If product has no Date Code, record month and year of purchase instead.

Note: Some parts are listed and shown for illustration purposes only, and are not available individually as replacement parts. Internal parts are not user-serviceable and are not available. Specify UPC 193175530585 when ordering parts.

Parts List

Part	Description	Qty
1	LED Cover	1
2	LED PCB	1
3	Front Panel	1
4	Clamp Power Switch	1
5	Switch Plate	1
6	12VDC Positive Connector	1
7	Clamp Power Switch	1
8	Battery Clamp	2
9	Housing	1
10	Main PCB	1

Part	Description	Qty
11	Rear Panel	1
12	Screw	10
13	Charging Port	1
14	Screw M4 x 10	2
15	Battery	1
16	Cap	4
17	Base	1
18	12VDC Negative Connector	1
19	12VDC Outlet Cover	1
20	Battery Charger	1

Assembly Diagram

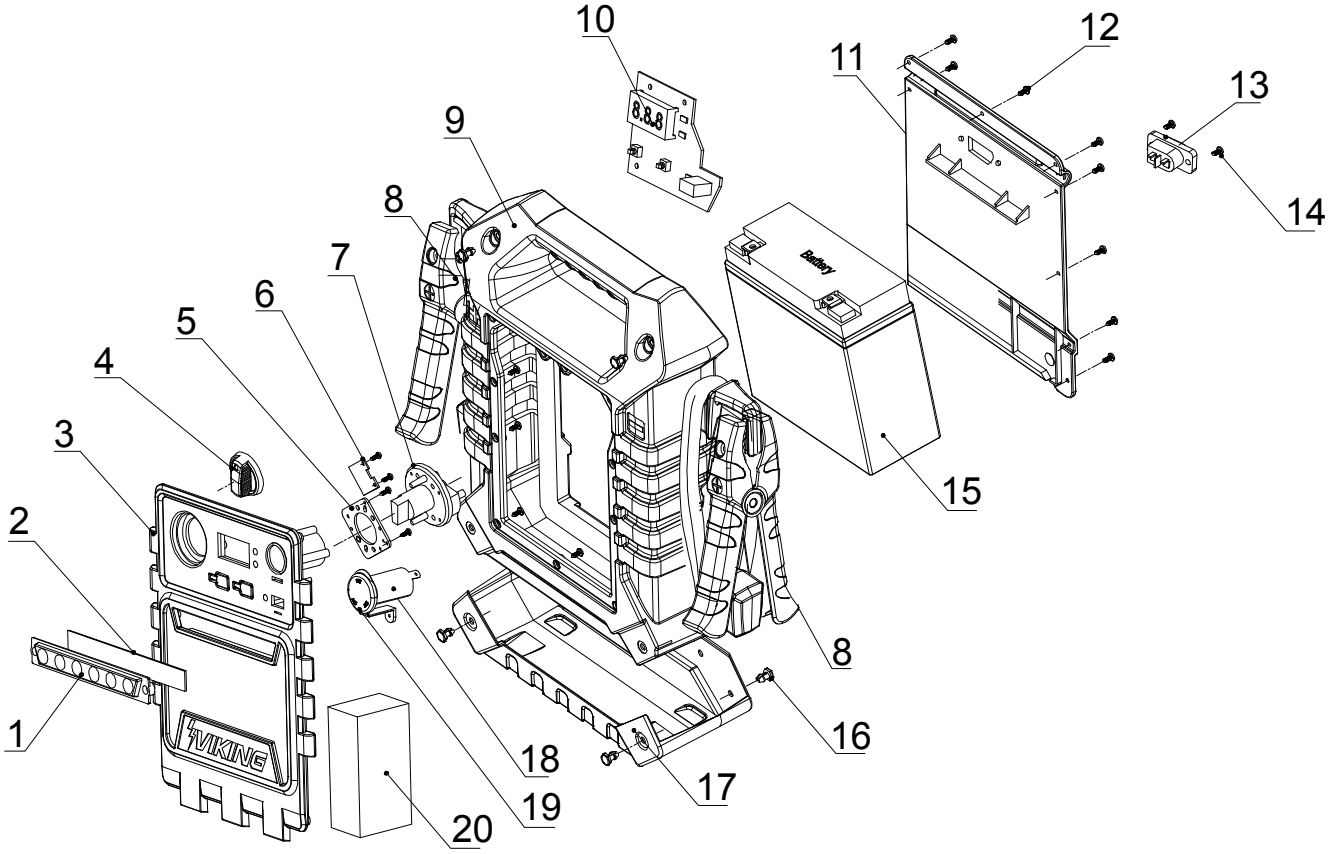

Limited 90 Day Warranty

Harbor Freight Tools Co. makes every effort to assure that its products meet high quality and durability standards, and warrants to the original purchaser that this product is free from defects in materials and workmanship for the period of 90 days from the date of purchase. This warranty does not apply to damage due directly or indirectly, to misuse, abuse, negligence or accidents, repairs or alterations outside our facilities, criminal activity, improper installation, normal wear and tear, or to lack of maintenance. We shall in no event be liable for death, injuries to persons or property, or for incidental, contingent, special or consequential damages arising from the use of our product. Some states do not allow the exclusion or limitation of incidental or consequential damages, so the above limitation of exclusion may not apply to you. THIS WARRANTY IS EXPRESSLY IN LIEU OF ALL OTHER WARRANTIES, EXPRESS OR IMPLIED, INCLUDING THE WARRANTIES OF MERCHANTABILITY AND FITNESS.

To take advantage of this warranty, the product or part must be returned to us with transportation charges prepaid. Proof of purchase date and an explanation of the complaint must accompany the merchandise. If our inspection verifies the defect, we will either repair or replace the product at our election or we may elect to refund the purchase price if we cannot readily and quickly provide you with a replacement. We will return repaired products at our expense, but if we determine there is no defect, or that the defect resulted from causes not within the scope of our warranty, then you must bear the cost of returning the product.

This warranty gives you specific legal rights and you may also have other rights which vary from state to state.

VIKING®

26677 Agoura Road • Calabasas, CA 91302 • 1-800-444-3353