Owner's Manual & Safety Instructions

Save This Manual Keep this manual for the safety warnings and precautions, assembly, operating, inspection, maintenance and cleaning procedures. Write the product's Date Code in the back of the manual (or month and year of purchase if product has no number). Keep this manual and the receipt in a safe and dry place for future reference.

26d

CENTRAL MACHINERY

6" x 48" BELT AND 9" DISC SANDER

59220

Visit our website at: https://www.harborfreight.com
For product assistance, visit harborfreight.com/customer-support/contact-us

When unpacking, make sure that the product is intact and undamaged. If any parts are missing or broken, please visit harborfreight.com/customer-support/contact-us as soon as possible.

Copyright© 2026 by Harbor Freight Tools®. All rights reserved.
No portion of this manual or any artwork contained herein may be reproduced in any shape or form without the express written consent of Harbor Freight Tools.
Diagrams within this manual may not be drawn proportionally. Due to continuing improvements, actual product may differ slightly from the product described herein. Tools required for assembly and service may not be included.

⚠WARNING

Read this material before using this product. Failure to do so can result in serious injury. SAVE THIS MANUAL.

Table of Contents

Safety 2
Specifications 5
Setup 6
Operation.....13
Maintenance.....16
Component List and Diagram.....20
Warranty 23

SAFETY

SETUP

OPERATION

MAINTENANCE

CENTRAL MACHINERY

WARNING SYMBOLS AND DEFINITIONS	
⚠	This is the safety alert symbol. It is used to alert you to potential personal injury hazards. Obey all safety messages that follow this symbol to avoid possible injury or death.
⚠ DANGER	Indicates a hazardous situation which, if not avoided, will result in death or serious injury.
⚠ WARNING	Indicates a hazardous situation which, if not avoided, could result in death or serious injury.
⚠ CAUTION	Indicates a hazardous situation which, if not avoided, could result in minor or moderate injury.
NOTICE CAUTION	Addresses practices not related to personal injury.

IMPORTANT SAFETY INFORMATION

General Tool Safety Warnings

⚠ WARNING

Read all safety warnings and instructions.
Failure to follow the warnings and instructions may result in electric shock, fire and/or serious injury.
Save all warnings and instructions for future reference.

1. KEEP GUARDS IN PLACE and in working order.
2. REMOVE ADJUSTING KEYS AND WRENCHES. Form habit of checking to see that keys and adjusting wrenches are removed from tool before turning it on.
3. KEEP WORK AREA CLEAN. Cluttered areas and benches invite accidents.
4. DON'T USE IN DANGEROUS ENVIRONMENT. Don't use power tools in damp or wet locations, or expose them to rain. Keep work area well lighted.
5. KEEP CHILDREN AWAY. All visitors should be kept safe distance from work area.
6. MAKE WORKSHOP KID PROOF with padlocks, master switches, or by removing starter keys.
7. DON'T FORCE TOOL. It will do the job better and safer at the rate for which it was designed.
8. USE RIGHT TOOL. Don't force tool or attachment to do a job for which it was not designed.

Table A: RECOMMENDED MINIMUM WIRE GAUGE FOR EXTENSION CORDS (120 VOLT)				
NAMEPLATE AMPERES (at full load)	**EXTENSION CORD LENGTH**			
	25′	**50′**	**100′**	**150′**
0 – 6	18	16	16	14
6.1 – 10	18	16	14	12
10.1 – 12	16	16	14	12
12.1 – 16	14	12	**Do not use.**	

9. USE PROPER EXTENSION CORD. Make sure your extension cord is in good condition. When using an extension cord, be sure to use one heavy enough to carry the current your product will draw. An undersized cord will cause a drop in line voltage resulting in loss of power and overheating. Table A shows the correct size to use depending on cord length and nameplate ampere rating. If in doubt, use the next heavier gauge. The smaller the gauge number, the heavier the cord.

10. WEAR PROPER APPAREL. Do not wear loose clothing, gloves, neckties, rings, bracelets, or other jewelry which may get caught in moving parts. Nonslip footwear is recommended. Wear protective hair covering to contain long hair.

11. ALWAYS USE SAFETY GLASSES. Also use face or dust mask if cutting operation is dusty. Everyday eyeglasses only have impact resistant lenses, they are NOT safety glasses.

12. SECURE WORK. Use clamps or a vise to hold work when practical. It's safer than using your hand and it frees both hands to operate tool.

13. DON'T OVERREACH. Keep proper footing and balance at all times.

14. MAINTAIN TOOLS WITH CARE. Keep tools sharp and clean for best and safest performance. Follow instructions for lubricating and changing accessories.

15. DISCONNECT TOOLS before servicing when changing accessories, such as blades, bits, cutters, and the like.

16. REDUCE THE RISK OF UNINTENTIONAL STARTING. Make sure switch is in off position before plugging in.

17. USE RECOMMENDED ACCESSORIES. Consult the owner's manual for recommended accessories. The use of improper accessories may cause risk of injury to persons.

18. NEVER STAND ON TOOL. Serious injury could occur if the tool is tipped or if the cutting tool is unintentionally contacted.

19. CHECK DAMAGED PARTS. Before further use of the tool, a guard or other part that is damaged should be carefully checked to determine that it will operate properly and perform its intended function – check for alignment of moving parts, binding of moving parts, breakage of parts, mounting, and any other conditions that may affect its operation. A guard or other part that is damaged should be properly repaired or replaced.

20. DIRECTION OF FEED. Feed work into a blade or cutter against the direction of rotation of the blade or cutter only.

21. NEVER LEAVE TOOL RUNNING UNATTENDED. TURN POWER OFF. Don't leave tool until it comes to a complete stop.

Grounding Instructions

⚠WARNING

TO PREVENT ELECTRIC SHOCK AND DEATH FROM INCORRECT GROUNDING WIRE CONNECTION READ AND FOLLOW THESE INSTRUCTIONS:

110-120 VAC Grounded Tools: Tools with Three Prong Plugs

1. In the event of a malfunction or breakdown, grounding provides a path of least resistance for electric current to reduce the risk of electric shock. This tool is equipped with an electric cord having an equipment-grounding conductor and a grounding plug. The plug must be plugged into a matching outlet that is properly installed and grounded in accordance with all local codes and ordinances.
2. Do not modify the plug provided – if it will not fit the outlet, have the proper outlet installed by a qualified electrician.
3. Improper connection of the equipment-grounding conductor can result in a risk of electric shock. The conductor with insulation having an outer surface that is green with or without yellow stripes is the equipment-grounding conductor. If repair or replacement of the electric cord or plug is necessary, do not connect the equipment-grounding conductor to a live terminal.
4. Check with a qualified electrician or service personnel if the grounding instructions are not completely understood, or if in doubt as to whether the tool is properly grounded.
5. Use only 3-wire extension cords that have 3-prong grounding plugs and 3-pole receptacles that accept the tool's plug.
6. Repair or replace damaged or worn cord immediately.

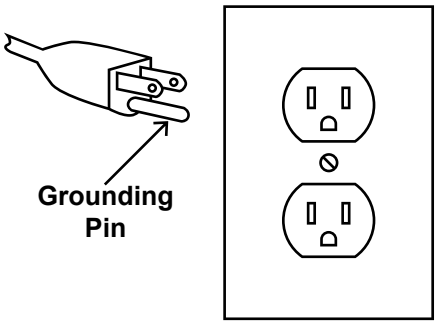

125 VAC 3-Prong Plug and Outlet (for up to 125 VAC and up to 15)

7. This tool is intended for use on a circuit that has an outlet that looks like the one illustrated above in **125 VAC 3-Prong Plug and Outlet**. The tool has a grounding plug that looks like the plug illustrated above in **125 VAC 3-Prong Plug and Outlet**.
8. The outlet must be properly installed and grounded in accordance with all codes and ordinances.
9. Do not use an adapter to connect this tool to a different outlet.

Sander Safety Warnings

For Your Own Safety Read Instruction Manual Before Operating Sander

1. Wear eye protection.
2. Support workpiece with miter gauge, backstop, or worktable.
3. Maintain 1/16 inch maximum clearance between table and sanding belt or disc.
4. Avoid kickback by sanding in accordance with the directional arrows.
5. The backstop is a fence near the surface that helps the operator maintain control of the workpiece and prevents the workpiece from being pulled into the machine. For safety, it must be adjusted very close to the sanding surface.
6. The worktable is the surface mounted close to the sanding surface that the operator rests the workpiece against to prevent it from being pulled adjusted very close to the sanding surface.
7. The sanding belt is designed to rotate down towards the table while the disc rotates both up from the table and down towards the table. Sand on the belt with the workpiece in front of the backstop and/or table. Sand only on the downward moving surface of the disc - sanding on the upward moving surface may result in the workpiece being thrown up and towards the operator.
8. Remove Safety Key when the Switch is turned off. Do not leave the Safety Key in the Switch when the tool is not in use.

9. **DO NOT OPERATE WITH ANY GUARD DISABLED, DAMAGED, OR REMOVED. Moving guards must move freely and close instantly.**

10. The use of accessories or attachments not recommended by the manufacturer may result in a risk of injury to persons.

11. When servicing use only identical replacement parts.

12. Only use safety equipment that has been approved by an appropriate standards agency. Unapproved safety equipment may not provide adequate protection. Eye protection must be ANSI-approved and breathing protection must be NIOSH-approved for the specific hazards in the work area.

13. Stay alert, watch what you are doing and use common sense when operating a power tool. Do not use a power tool while you are tired or under the influence of drugs, alcohol or medication. A moment of inattention while operating power tools may result in serious personal injury.

14. Industrial applications must follow OSHA guidelines.

15. Maintain labels and nameplates on the tool. These carry important safety information. If unreadable or missing, contact Harbor Freight Tools for a replacement.

16. Avoid unintentional starting. Prepare to begin work before turning on the tool.

17. People with pacemakers should consult their physician(s) before use. Electromagnetic fields in close proximity to heart pacemaker could cause pacemaker interference or pacemaker failure.

18. The warnings, precautions, and instructions discussed in this instruction manual cannot cover all possible conditions and situations that may occur. It must be understood by the operator that common sense and caution are factors which cannot be built into this product, but must be supplied by the operator.

Vibration Safety

This tool vibrates during use. Repeated or long-term exposure to vibration may cause temporary or permanent physical injury, particularly to the hands, arms and shoulders. To reduce the risk of vibration-related injury:

1. Anyone using vibrating tools regularly or for an extended period should first be examined by a doctor and then have regular medical check-ups to ensure medical problems are not being caused or worsened from use. Pregnant women or people who have impaired blood circulation to the hand, past hand injuries, nervous system disorders, diabetes, or Raynaud's Disease should not use this tool. If you feel any medical or physical symptoms related to vibration (such as tingling, numbness, and white or blue fingers), seek medical advice as soon as possible.

2. Do not smoke during use. Nicotine reduces the blood supply to the hands and fingers, increasing the risk of vibration-related injury.

3. Use tools with the lowest vibration when there is a choice between different processes.

4. Include vibration-free periods each day of work.

5. Grip tool as lightly as possible (while still keeping safe control of it). Let the tool do the work.

6. To reduce vibration, maintain the tool as explained in this manual. If any abnormal vibration occurs, stop use immediately.

SAVE THESE INSTRUCTIONS.

Specifications

Electrical Rating	120VAC / 60Hz / 12A
Belt Size	6" W x 48" L
Disc Size	9"
Maximum Speed	1800 RPM (Disc) 1400 FPM (Belt)

Setup - Before Use:

Read the ENTIRE IMPORTANT SAFETY INFORMATION section at the beginning of this manual including all text under subheadings therein before set up or use of this product.

WARNING

TO PREVENT SERIOUS INJURY FROM ACCIDENTAL OPERATION:
Turn the Power Switch of the tool off and unplug the tool from its electrical outlet before performing any procedure in this section.

Note: For additional information regarding the parts listed in the following pages, refer to the Assembly Diagram near the end of this manual.

Functions

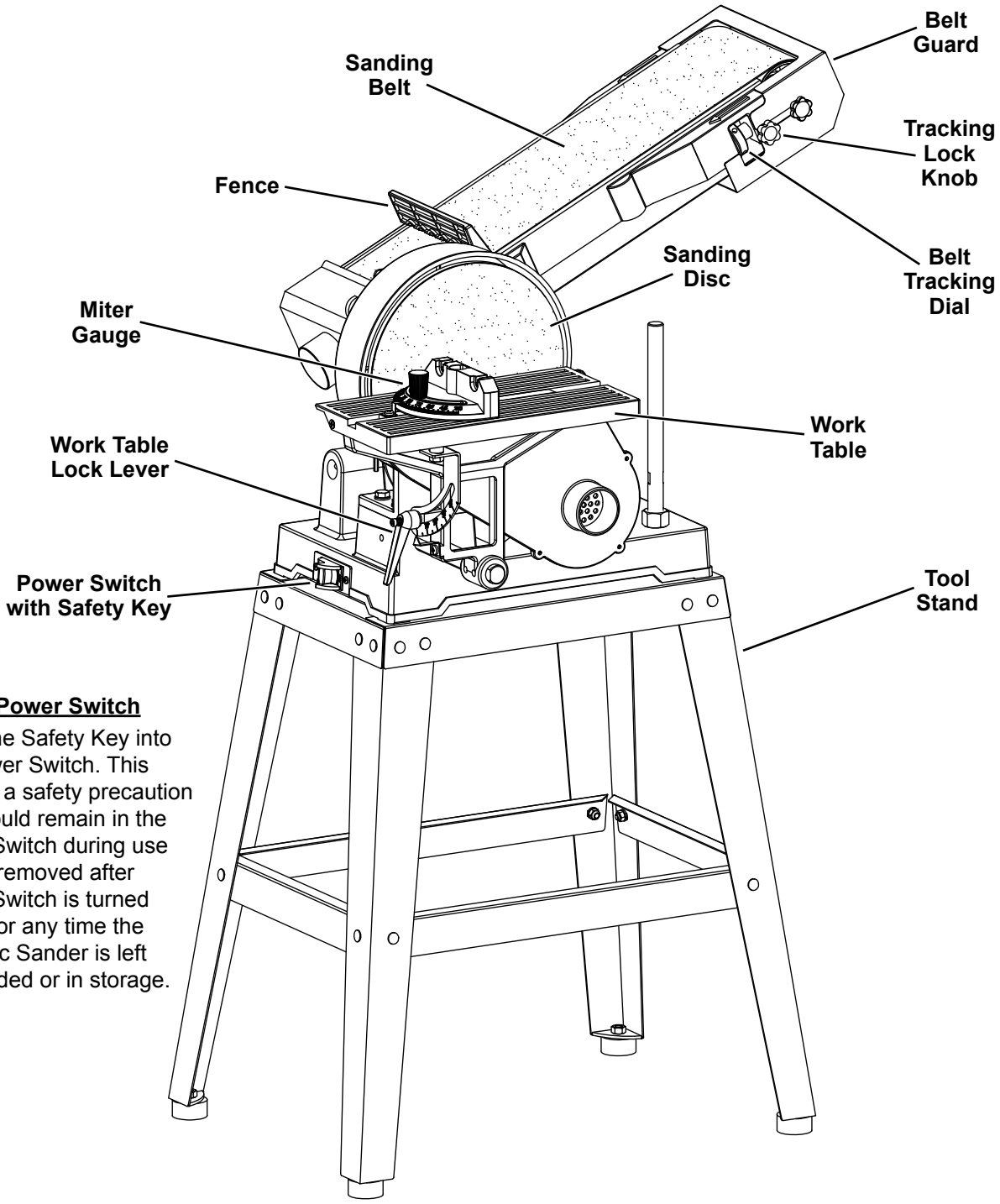

Safety Power Switch

Insert the Safety Key into the Power Switch. This "Key" is a safety precaution and should remain in the Power Switch during use and be removed after Power Switch is turned off and/or any time the Belt/Disc Sander is left unattended or in storage.

Assembly

Tool Stand Assembly

Finger tighten hardware until assembly is complete.

1. Attach a Foot to the bottom of each Leg using four Bolts (77), Flat Washers (78), and Nuts (80).

2. Attach Short Top Brace to Legs using four Carriage Bolts (81), Flat Washers (82), and Nuts (83).

3. Attach Short Brace to Legs using two Carriage Bolts (81), Flat Washers (82), and Nuts (83).

4. Repeat for other side.

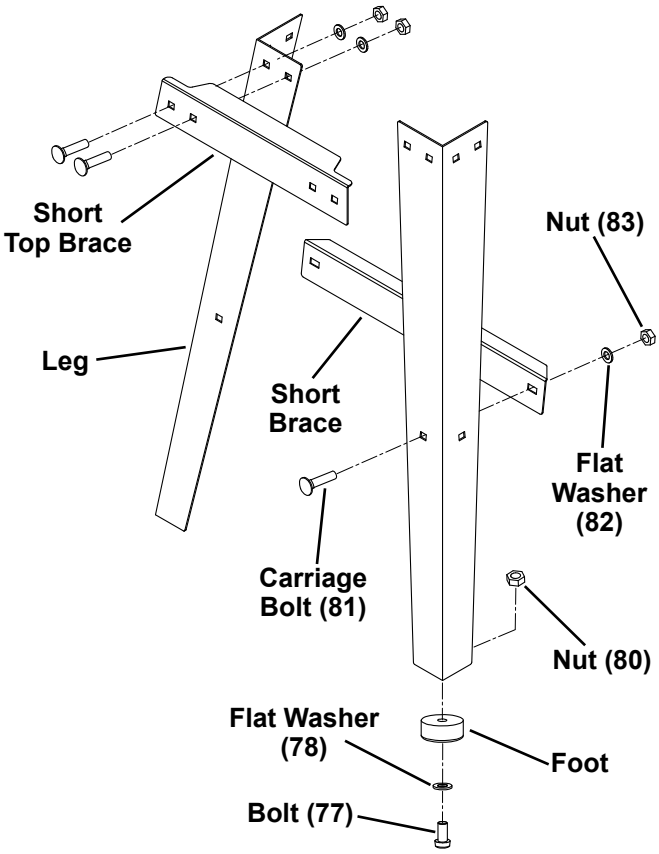

5. Attach Long Top Brace to leg assemblies using four Carriage Bolts (81), Flat Washers (82), and Nuts (83).

6. Attach Long Brace to leg assemblies using two Carriage Bolts (81), Flat Washers (82), and Nuts (83).

7. Repeat for other side.

8. Use a square (sold separately) to check Tool Stand top corners and sides are square. Tighten all hardware securely.

9. Place Tool Stand on flat, hard, level surface capable of supporting weight of tool and workpiece.

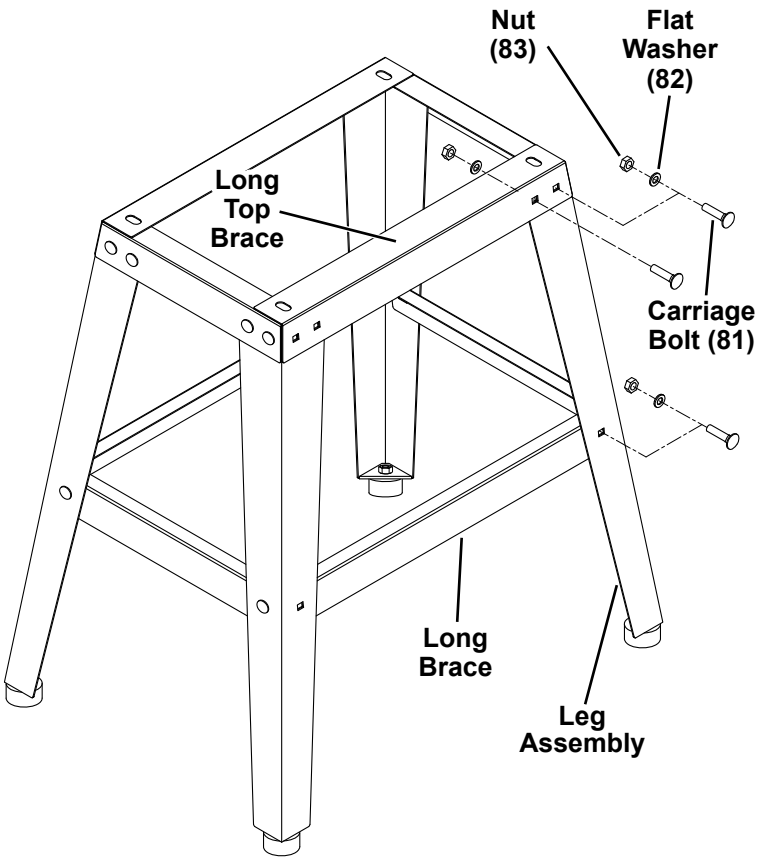

Mounting Sander to Tool Stand

1. With assistance, place Sander on top of Tool Stand, aligning threaded mounting holes on Base with mounting holes on Tool Stand.

2. From underneath Tool Stand, secure Base to Stand by inserting four sets of Hex Head Bolts (84), Lock Washers (85), and Flat Washers (86) upward through Stand's four mounting holes.

3. Tighten Bolts securely into threaded mounting holes on Base.

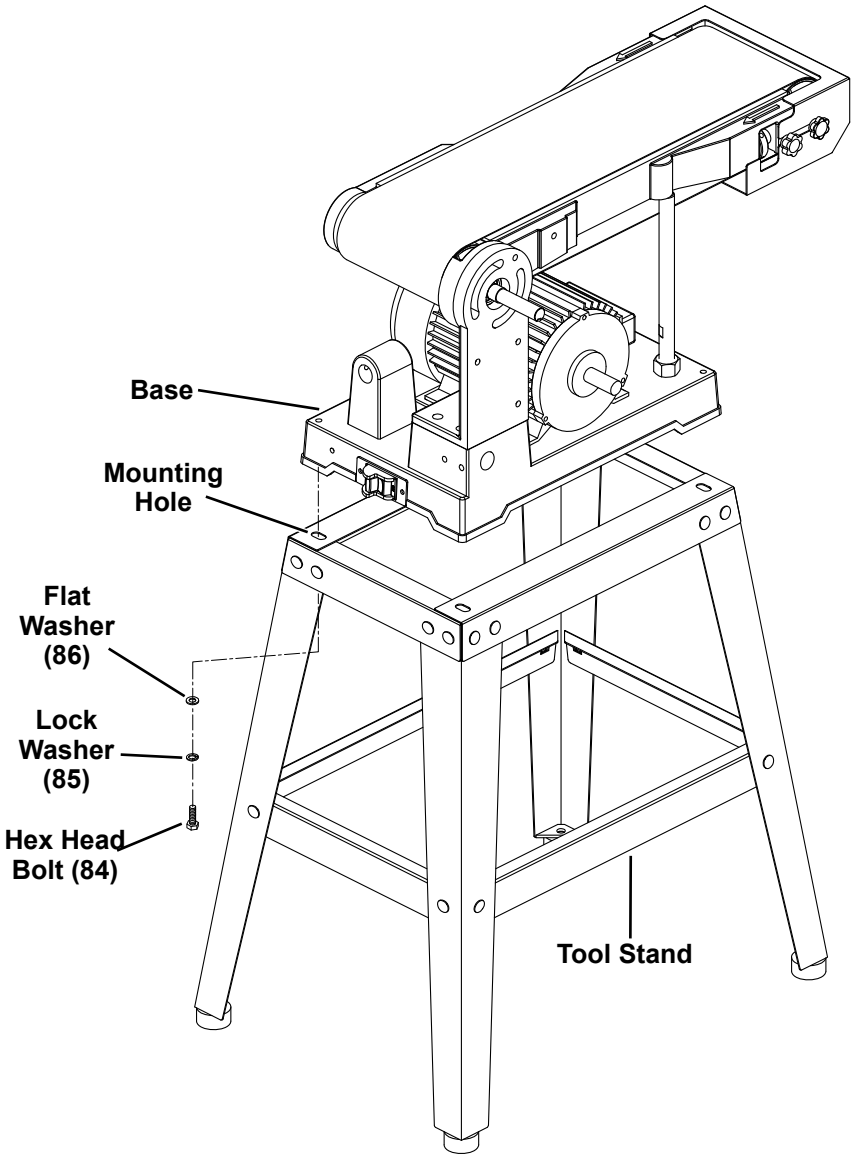

Mounting Fence

1. Align mounting hole on Fence with threaded mounting hole on Sanding Belt Frame. **Fence should not touch Sanding Belt.**

2. Secure Fence using Hex Head Bolt (97) and Flat Washer (98).

WARNING! TO PREVENT SERIOUS INJURY: Adjust Fence height to avoid contact with Sanding Belt and allow free Belt movement.

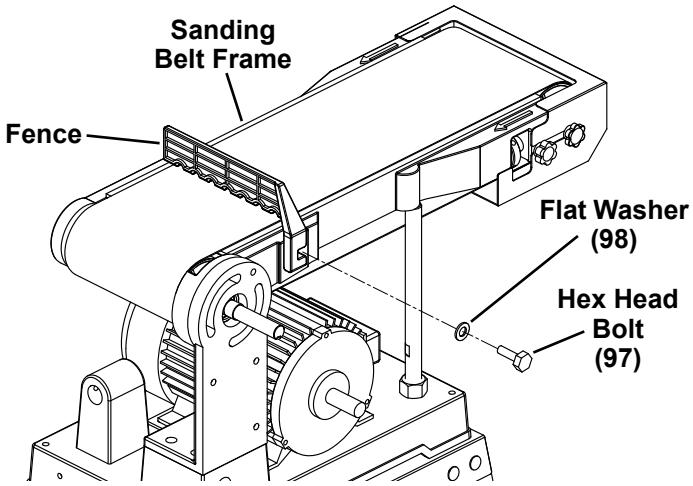

Install Disc/Pulley Housing

Attach Disc/Pulley Housing to Support Bracket using four Hex Head Bolts (28) and Flat Washers (27).

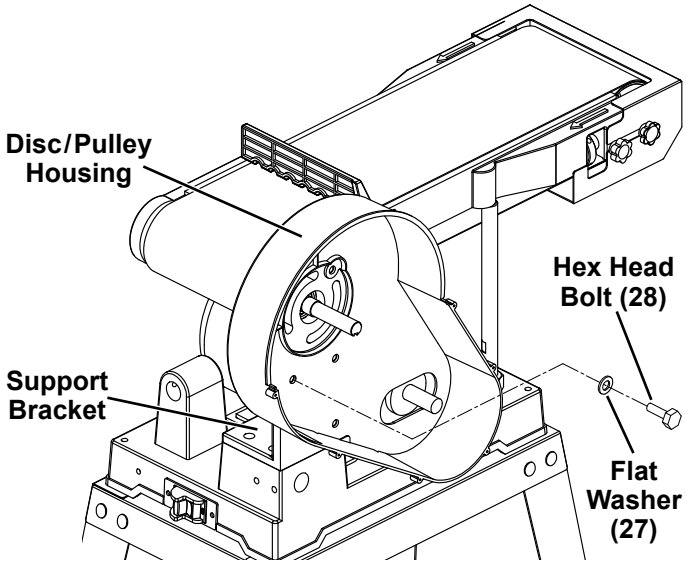

Install Pulleys

1. Loosen Set Screw on the Drive Pulley. Slide Drive Pulley onto Drive Shaft, with Long Machine Key lined up with slot on Pulley. Check that Key stays in correct position completely through Pulley.

2. Loosen Set Screw on the Motor Pulley. Slide Motor Pulley onto Motor Shaft, with Short Machine Key lined up with slot on Pulley. Check that Key stays in correct position completely through Pulley.

3. Align Motor and Drive Pulleys using a straight edge (sold separately) against their outer faces and position them parallel and aligned with each other.

4. Place included Hex Wrench through slot in Disc/Pulley Housing. Tighten Set Screw on Drive Pulley.

5. Tighten Set Screw on Motor Pulley.

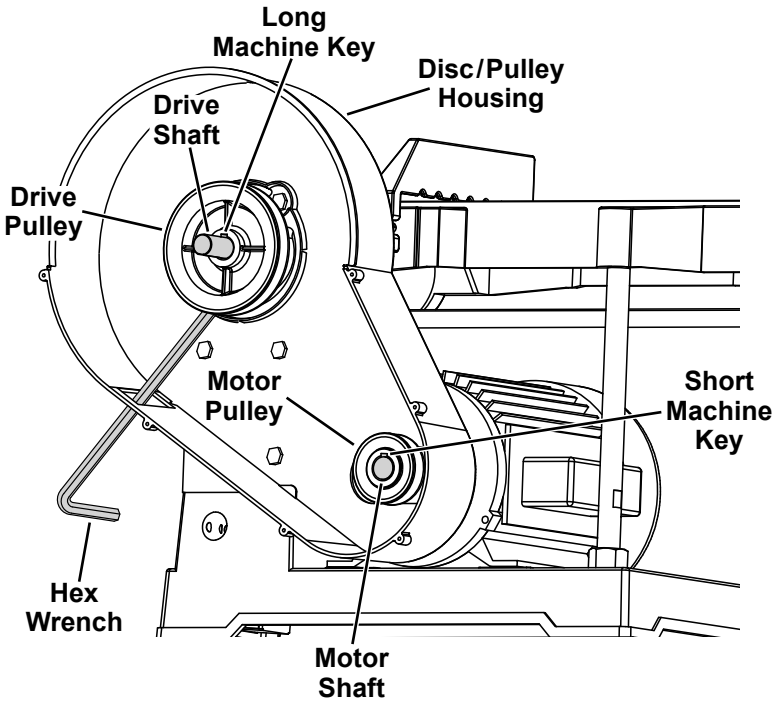

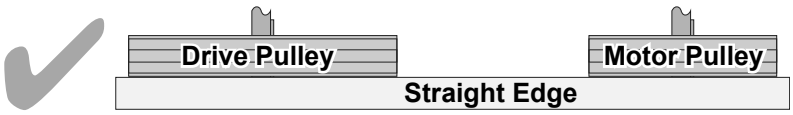

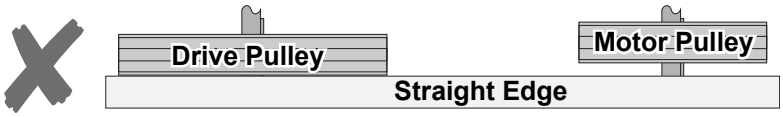

Install Drive Belt

1. Use included Wrench to loosen four Motor Mount Bolts just enough to let the Motor move.

2. Move Motor toward Drive Pulley enough to allow the Drive Belt to slip over Drive and Motor Pulleys. Check Belt is properly seated in Pulley grooves.

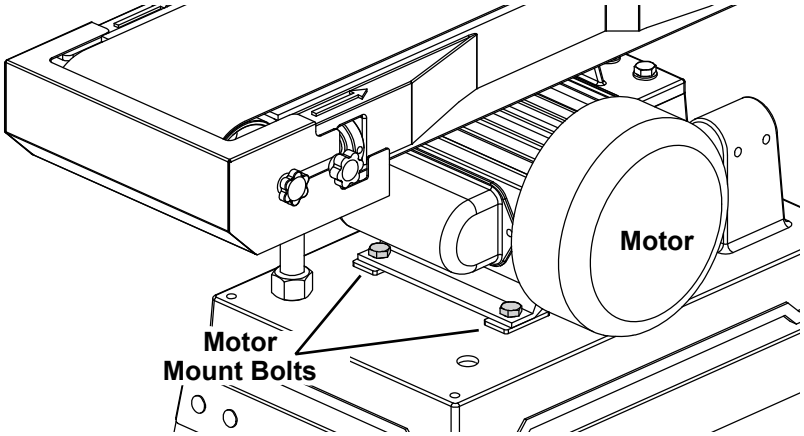

3. Tighten Drive Belt by moving Motor away from Drive Pulley.

4. Hold Motor in place and tighten the four Motor Mount Bolts.

5. Check Drive Belt tension by squeezing both sides of Belt toward each other. Belt should deflect anywhere from 1/8 to 1/4 inch. Adjust tension as needed. Check Belt is properly seated in Pulley grooves.

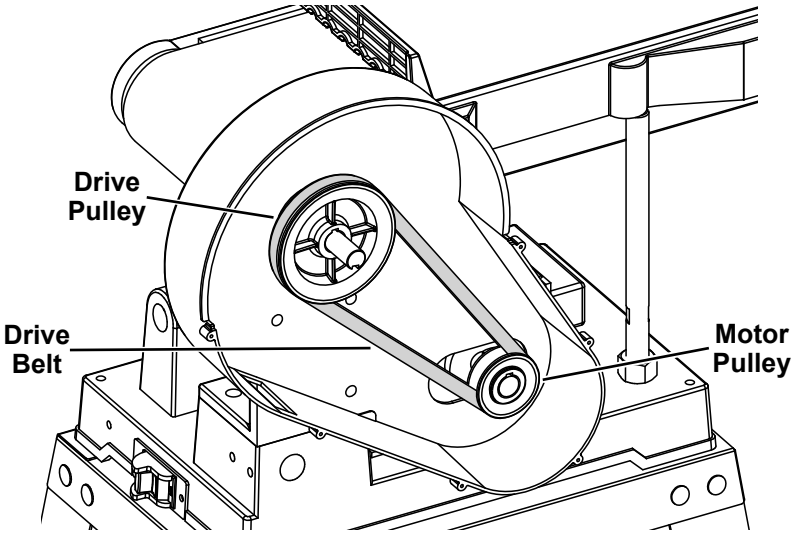

Install Backing Disc

1. Use included Hex Wrench to loosen Set Screw on Backing Disc.

2. Slide Backing Disc onto Drive Shaft flush with end of Shaft.

3. Use Hex Wrench through slot in Disc/Pulley Housing to tighten Set Screw on Backing Disc.

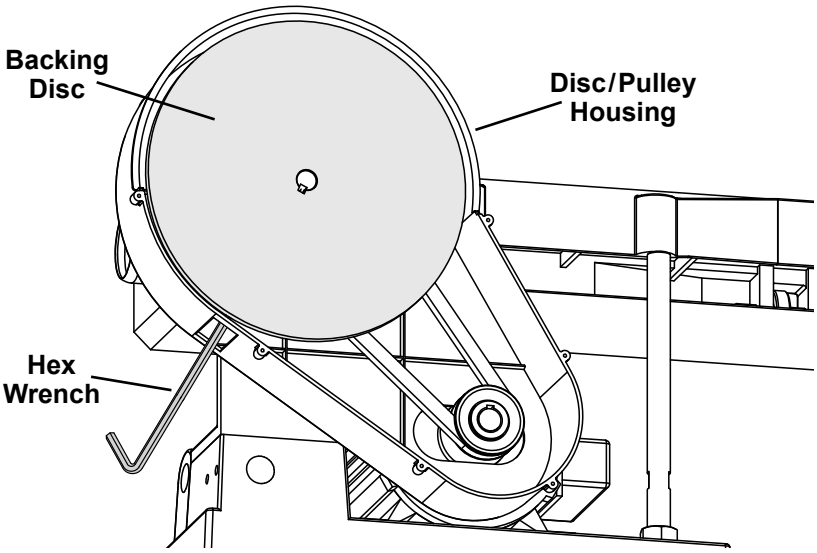

Install Sanding Disc and Disc Dust Port

1. Clean Backing Disc with denatured alcohol (sold separately).
2. Remove backing from Sanding Disc.
3. Align Sanding Disc over Backing Disc and press firmly onto Backing Disc.
4. Attach Sanding Disc Dust Port to Disc/Pulley Housing with six Self-Tapping Screws (55).

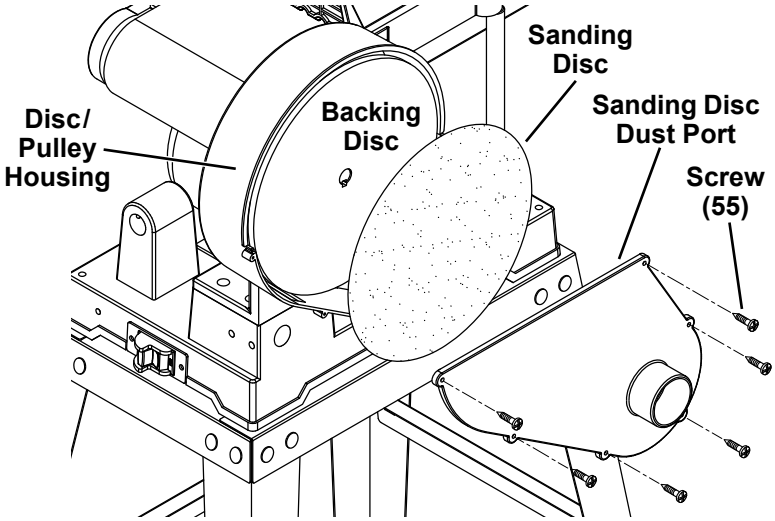

Mounting Work Table for Disc Sanding

1. Loosen Set Screws.
2. Insert end of Table Support Bar into side of Base as shown.
3. Turn Support Bar so flat side is facing the Set Screws.
4. Tighten Set Screws to secure the Bar.

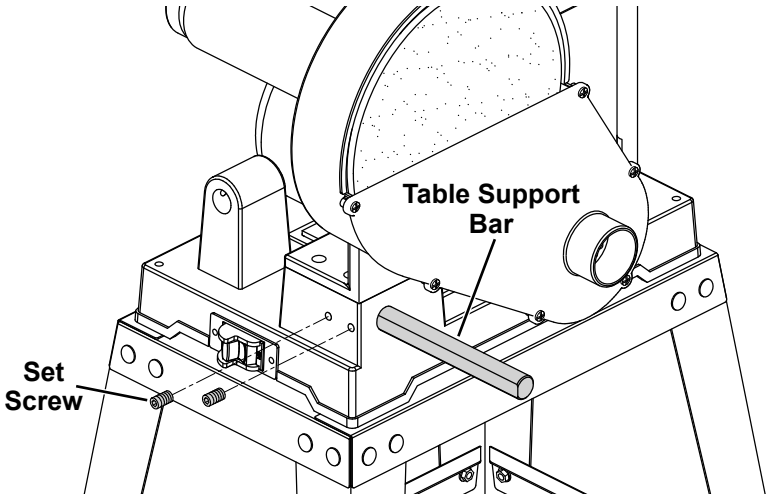

5. Slide Work Table assembly onto Table Support Bar.
6. Adjust Table so edge is 1/16 inch from Sanding Disc.
7. Tighten two Set Screws on Table Support to secure Work Table.

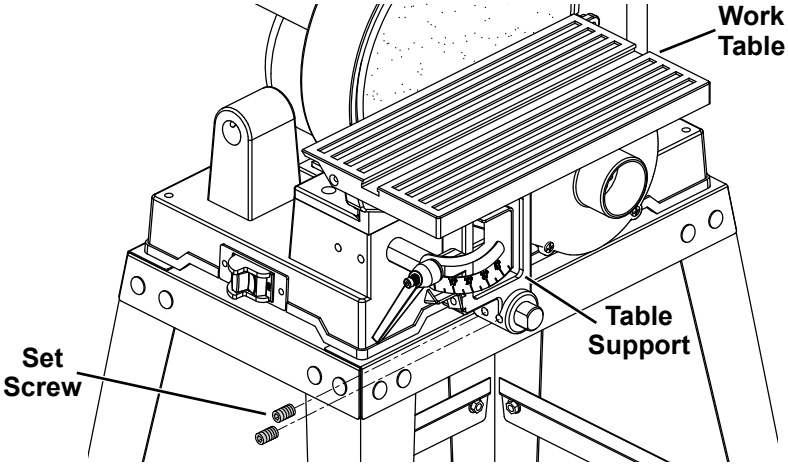

Mounting Work Table for Vertical Belt Sanding

1. Move Sanding Belt Frame to vertical position according to *Changing Sanding Belt Frame Position* on page 13.
2. Loosen two Set Screws on side of Base and remove Work Table with Table Support Bar.
3. Insert end of Table Support Bar into Mounting Bracket and tighten two Set Screws on Bracket.
4. Loosen two Set Screws on Table Support and position Work Table 1/16 inch from Sanding Belt.
5. Tighten two Set Screws on Table Support to secure Work Table.

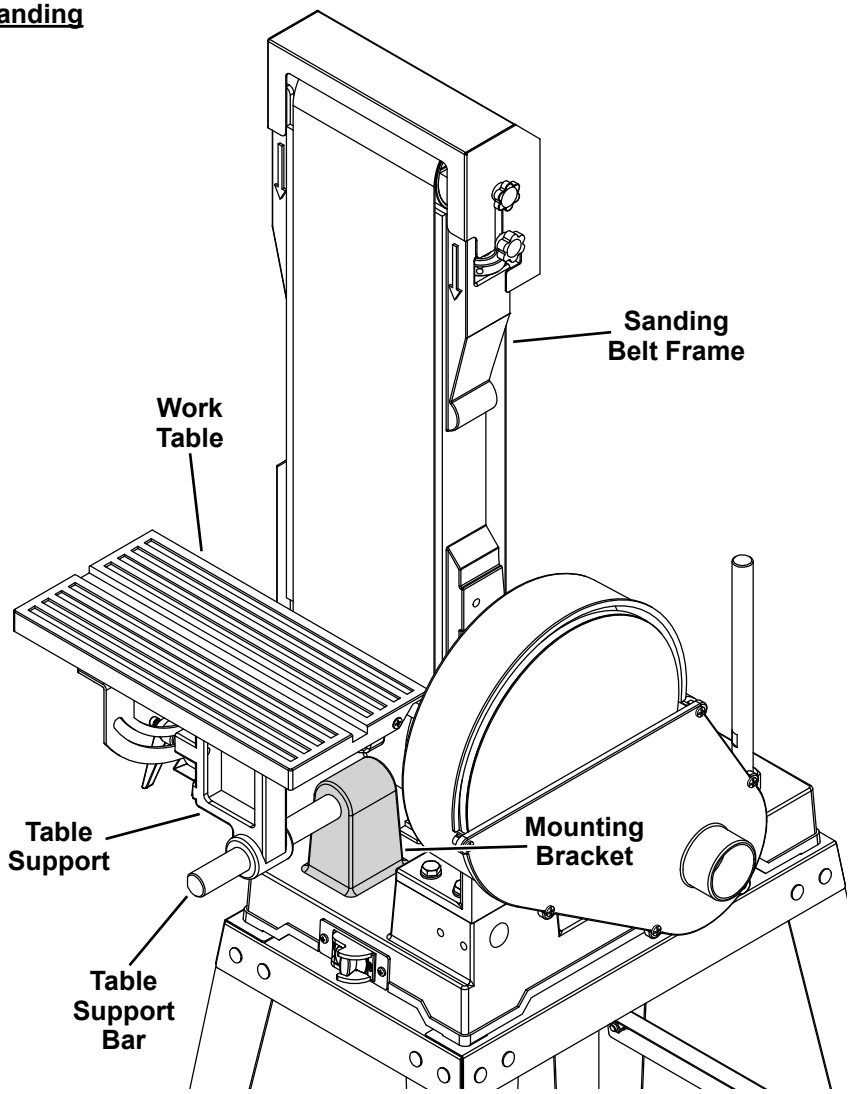

Install Sanding Belt Dust Port

1. Align two mounting holes in Sanding Belt Dust Port with two threaded mounting holes on Support Bracket.
2. Attach Dust Port to Bracket using two Socket Pan Head Screws (9).

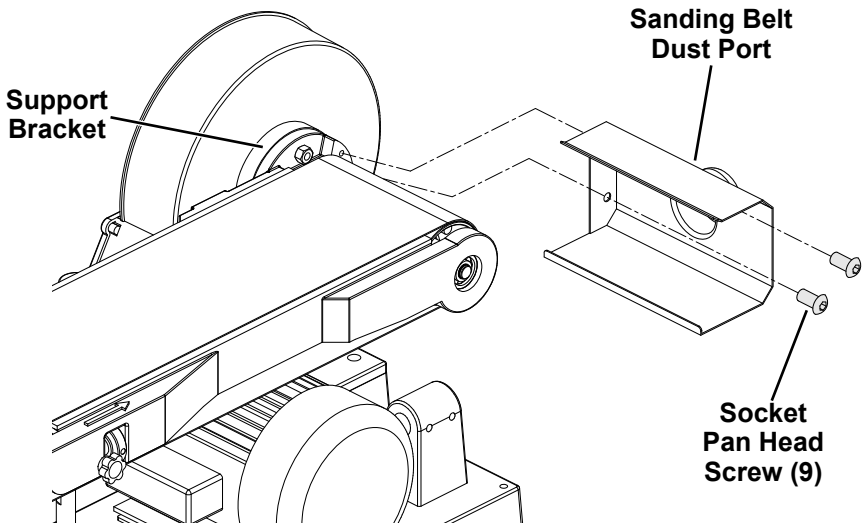

Read the ENTIRE IMPORTANT SAFETY INFORMATION section at the beginning of this manual including all text under subheadings therein before set up or use of this product.

Tool Set Up

WARNING

TO PREVENT SERIOUS INJURY FROM ACCIDENTAL OPERATION:
Turn the Power Switch of the tool off and unplug the tool from its electrical outlet before performing any procedure in this section.

TO PREVENT SERIOUS INJURY:
DO NOT OPERATE WITH ANY GUARD DISABLED, DAMAGED, OR REMOVED.

Adjusting Sanding Belt Tracking

1. Loosen Left and Right Tracking Lock Knobs and check Belt Tracking Dials are evenly tightened on both sides and Sanding Belt is sufficiently tight.
2. Spin Belt by hand to note any gross side to side movement. Belt should remain centered on front and rear Drums. If Belt starts moving to either side, it needs adjustment.
   a. If Belt moves to left, increase tension on left side Tracking Dial.
   b. If Belt moves to right, increase tension on right side Tracking Dial.
3. To fine tune tracking:
   a. Make sure Power Switch is in the off-position with Safety Key removed, then plug in the tool.
   b. Insert Safety Key into Power Switch.
   c. Turn Sander on and immediately off again after adjustment to check alignment. If necessary, adjust Belt Tracking Dials until Belt rides in center of front and rear Drums, then tighten Tracking Lock Knobs.
   d. When finished, remove Safety Key and unplug tool from outlet.

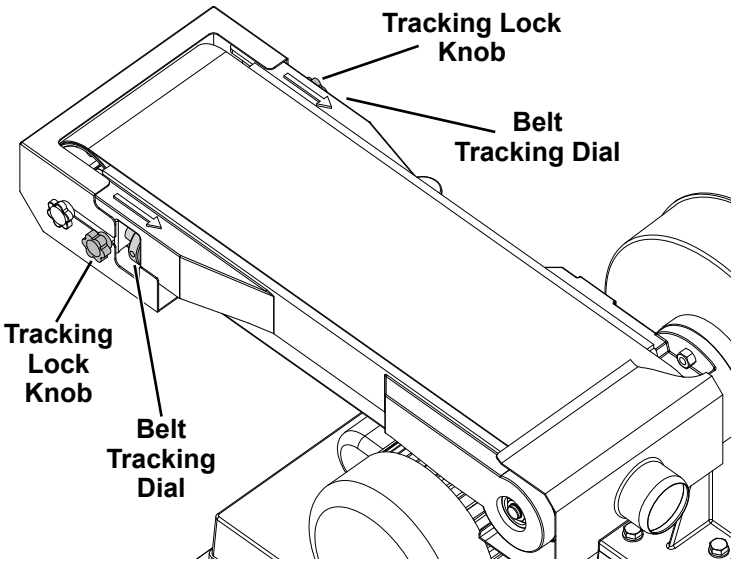

Changing Sanding Belt Frame Position

Sanding Belt Frame position can be horizontal, vertical, or any angle in-between. To change Belt Frame position, do the following:

1. Use included Wrench to loosen Sanding Belt Frame Lock Nut.
2. Raise Sanding Belt Frame to desired vertical position/angle.
3. Tighten Sanding Belt Frame Lock Nut.

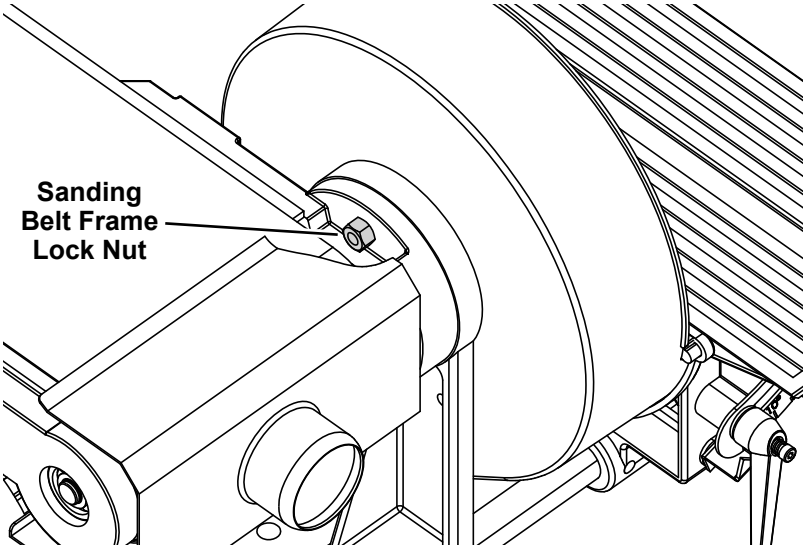

Leveling the Work Table

For accurate end sanding the Work Table must be square to the Sanding Disc.

1. Place a square (sold separately) on Work Table against Sanding Disc.
2. Loosen Work Table Lock Lever.
3. Adjust Work Table until square with Table edge 1/16 inch from Sanding Disc. **Table should not touch Sanding Disc.**
4. Tighten Lock Lever.

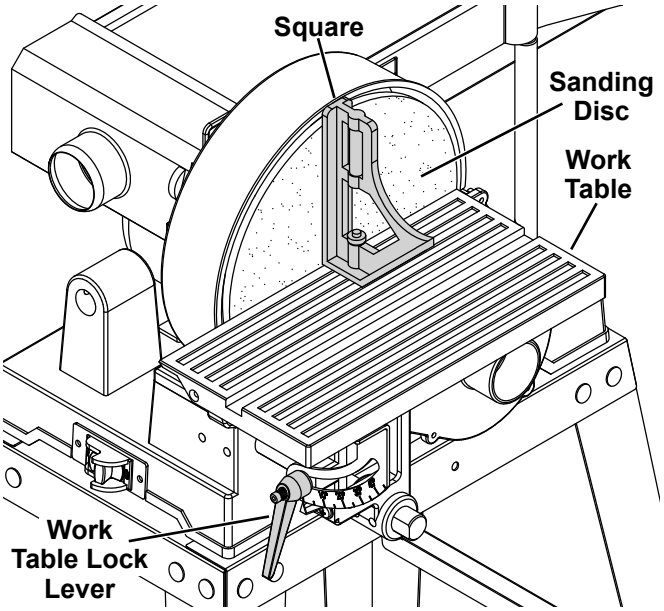

Dust Collection Setup

1. When using the Belt Sander, connect a 2" dust collection hose and hose clamp from the Sanding Belt Dust Port to a dust collection system (sold separately).
2. When using the Disc Sander, connect a 2" dust collection hose and hose clamp from the Sanding Disc Dust Port to a dust collection system (sold separately).
3. Periodically check Dust Ports for sawdust buildup and clean as needed.
4. It is recommended to wear a dust mask or respirator even when using a dust collection system.

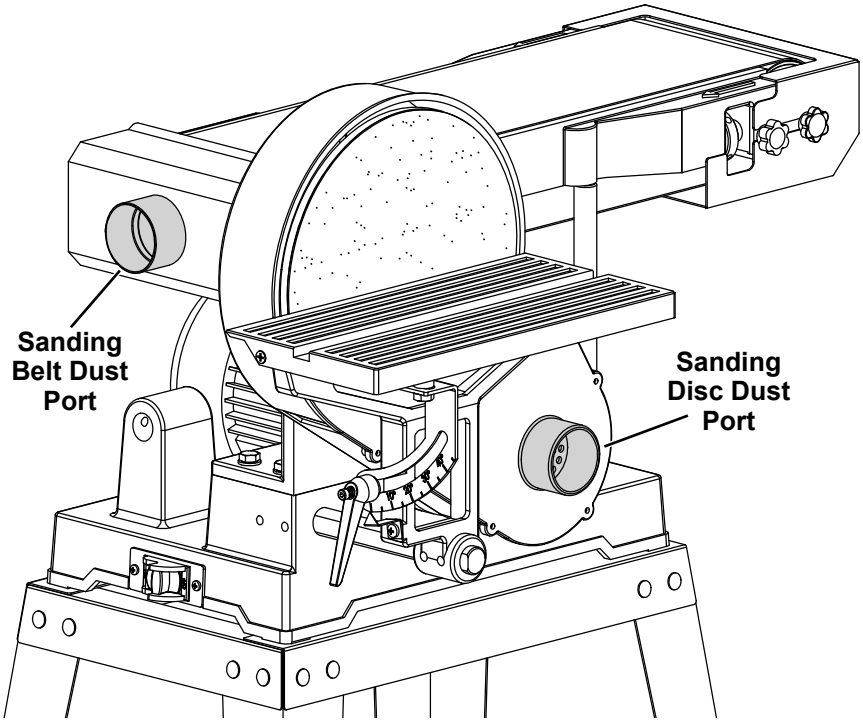

Using the Miter Gauge

For sanding at specific angles.

1. Place Miter Gauge in groove in Work Table.
2. Loosen Lock Knob.
3. Adjust Miter Gauge to desired angle on scale.
4. Tighten Lock Knob.

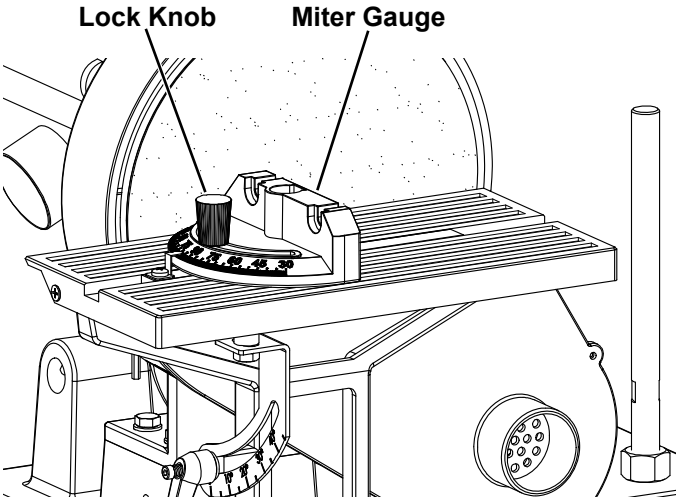

Work Area Set Up

1. Designate a work area that is clean and well lit. The work area must not allow access by children or pets to prevent distraction and injury.
2. There must not be objects, such as utility lines, nearby that will present a hazard while working.
3. Route the power cord along a safe route to reach the work area without creating a tripping hazard or exposing the power cord to possible damage. The power cord must reach the work area with enough extra length to allow free movement while working.

General Operating Instructions

1. Make sure Power Switch is in the off-position with Safety Key removed, then plug in the tool.
2. Turn on the dust collection system (if used).
3. Insert Safety Key into Power Switch.
4. Make sure nothing is contacting the Sanding Disc or Belt, then turn on the Power Switch.
5. When using Disc Sander, only use LEFT side of Sanding Disc (as you face it) to sand. Sanding Disc turns counterclockwise and using the right side could cause kickback.
6. Use two hands and hold workpiece securely against the Fence/Work Table at all times. Press workpiece against the Belt/Disc to start sanding. Keep workpiece moving for a better finish.
7. Occasionally check the Sanding Belt and Sanding Disc for tears, wear, or fraying. Replace when necessary.
8. After use, turn off the tool, remove the Safety Key from the Power Switch, and disconnect from the power supply. Store Safety Key in a safe place away from children's reach. Clean and store the tool indoors out of children's reach.

Procedures not specifically explained in this manual must be performed only by a qualified technician.

⚠WARNING

TO PREVENT SERIOUS INJURY FROM ACCIDENTAL OPERATION:
Turn the Power Switch of the tool off and unplug the tool from its electrical outlet before performing any procedure in this section.

TO PREVENT SERIOUS INJURY FROM TOOL FAILURE:
Do not use damaged equipment. If abnormal noise or vibration occurs, have the problem corrected before further use.

Cleaning, Maintenance, and Lubrication

1. **BEFORE EACH USE,** inspect the general condition of the tool. Check for:
   - loose hardware
   - misalignment or binding of moving parts
   - cracked or broken parts
   - damaged electrical wiring
   - any other condition that may affect its safe operation.
2. **AFTER USE,** turn off the tool, remove the Safety Key from the Power Switch, and disconnect its power supply. Then, wipe external surfaces of the tool with clean cloth.
3. Apply a light coat of paste wax to the Work Table to make feeding material easier.
4. Periodically, wear ANSI-approved safety goggles and NIOSH-approved breathing protection and blow dust and debris out of the motor vents using dry compressed air.
5. The Bearings on this Sander are sealed and do not require lubrication.
6. **⚠WARNING! TO PREVENT SERIOUS INJURY: If the supply cord of this power tool is damaged, it must be replaced only by a qualified service technician.**

Sanding Disc Replacement

1. Remove Work Table if mounted in front of Sanding Disc.
2. Remove Sanding Disc Dust Port.
3. Peel off old Sanding Disc.
4. Clean Backing Disc with denatured alcohol.
5. Remove backing from new Sanding Disc.
6. Align Sanding Disc over Backing Disc and press firmly onto Backing Disc.
7. Replace Sanding Disc Dust Port.

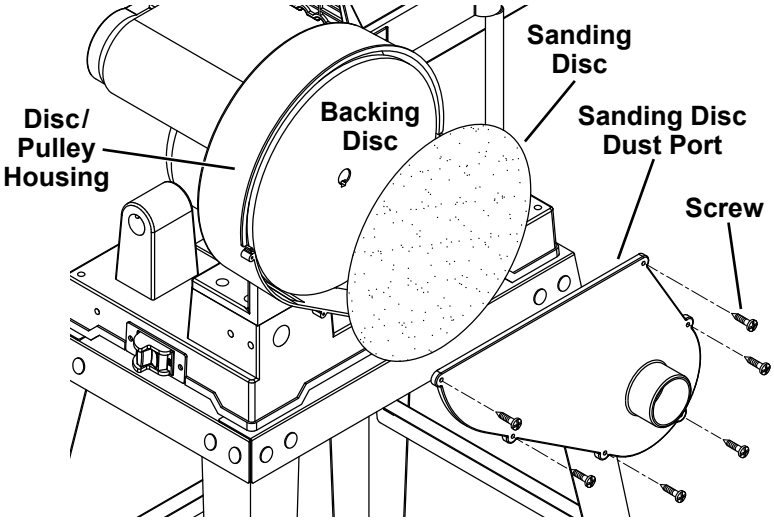

Sanding Belt Replacement

1. Loosen Lock Knobs and remove Belt Guard.
2. Loosen both Tracking Lock Knobs and Belt Tracking Dials to release tension on Sanding Belt.
3. Push down on upper Drum and remove old Sanding Belt.
4. Slide new 6"x48" Sanding Belt onto Drums with arrows on inside of Belt pointing in same direction indicated by directional arrows.
5. Center Belt on Drums. Tighten Tracking Dials evenly to tension Belt. Replace Belt Guard.
6. Adjust Sanding Belt alignment as described in *Adjusting Sanding Belt Tracking* on page 13.

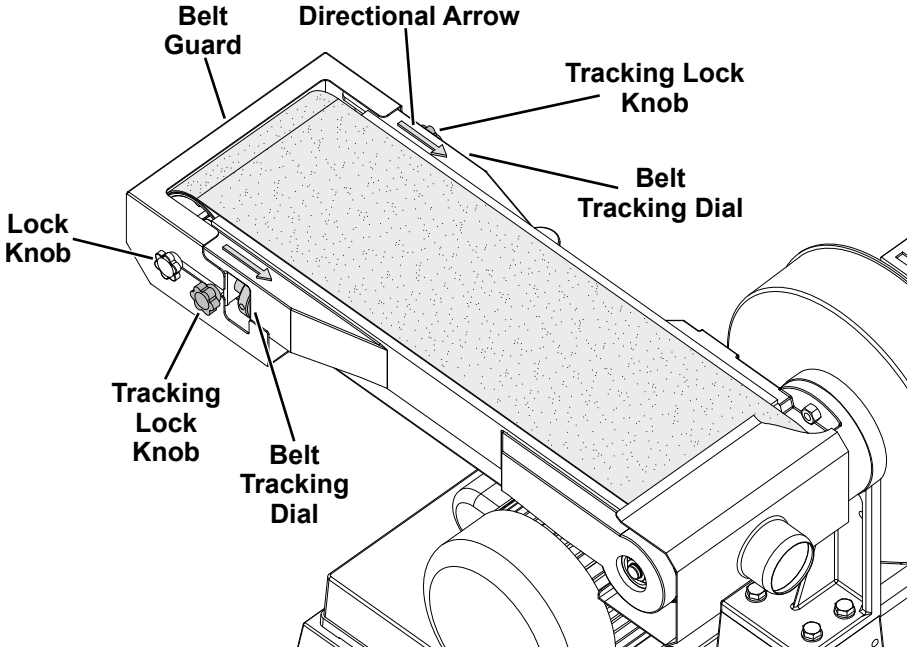

Drive Belt Replacement/Tensioning

1. Remove Work Table, if mounted.
2. Remove Sanding Disc Dust Port.
3. Loosen Set Screw on Backing Disc and remove.
4. Loosen four Motor Mount Bolts just enough to let the Motor move.
5. Move Motor toward Drive Pulley enough to allow Drive Belt to be removed.
6. Remove old Drive Belt. Place new Drive Belt onto Pulleys. Check Belt is properly seated in Pulley grooves.
7. Tighten Drive Belt by moving Motor away from Drive Pulley. Hold Motor in place and retighten the four Motor Mount Bolts.
8. Check Drive Belt tension by squeezing both sides of Belt toward each other. Belt should deflect anywhere from 1/8 to 1/4 inch. Adjust tension as needed. Check Belt is properly seated in Pulley grooves.
9. When Belt tensioning is complete, reinstall Backing Disc and Sanding Disc Dust Port.

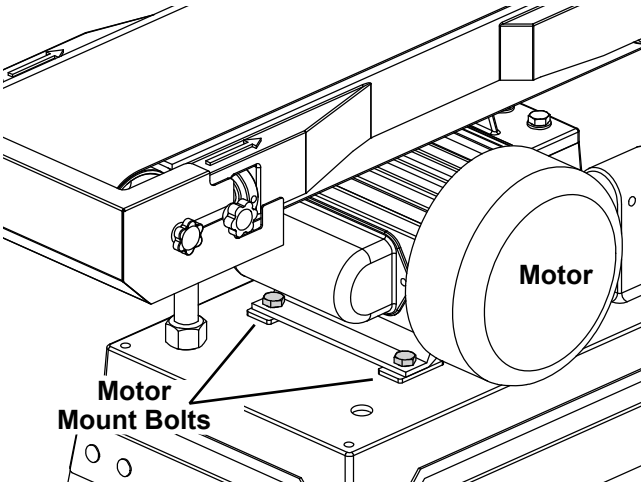

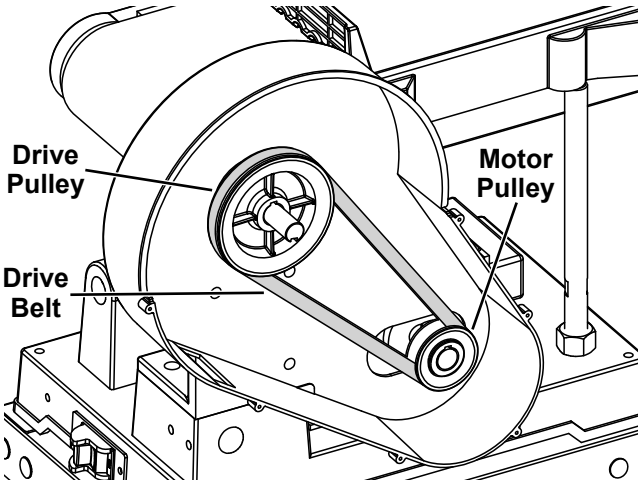

Troubleshooting

Problem	Possible Causes	Likely Solutions
Belt/Disc Sander does not turn on	1. Cord not connected. 2. No power at outlet. 3. Safety Key not inserted into Switch. 4. Power Switch is not turned ON. 5. Tool's thermal reset breaker tripped (if equipped). 6. Internal damage or wear. (Carbon brushes or switch, for example.)	1. Check that cord is plugged in. 2. Check power at outlet. If outlet is unpowered, turn off tool and check circuit breaker. If breaker is tripped, make sure circuit is right capacity for tool and circuit has no other loads. 3. Insert Safety Key into Power Switch. 4. Turn Power Switch ON. 5. Turn off tool and allow to cool. Press reset button on tool. 6. Have technician service tool.
Tool operates slowly.	Extension cord too long or wire size too small.	Eliminate use of extension cord. If an extension cord is needed, use one with the proper diameter for its length and load. See **Table A** on page 3.
Motor slows when sanding	1. Drive Belt too tight. 2. Applying too much pressure while sanding.	1. Adjust Drive Belt tension. Refer to *Drive Belt Replacement/Tensioning* on page 17. 2. Use less pressure.
Wood burns while sanding	1. Sanding Disc or Belt may be loaded with dirt or debris. 2. Applying too much pressure while sanding.	1. Clean or replace Disc or Belt using instructions in this manual. 2. Use less pressure.
Performance decreases over time.	1. Sanding Disc or Belt may be loaded with dirt or debris and/or damaged. 2. Carbon brushes worn or damaged.	1. Clean or replace Disc or Belt using instructions in this manual. 2. Have qualified technician replace brushes.
Excessive noise or rattling.	1. Internal damage or wear. (Carbon brushes or bearings, for example.) 2. Belt too loose (slipping) or too tight (bearing damage).	1. Have qualified technician service tool. 2. Adjust Drive Belt tension. Refer to *Drive Belt Replacement/Tensioning* on page 17. Have qualified technician service tool.
Overheating.	1. Forcing tool to work too fast. 2. Sanding Disc or Belt may be loaded with dirt or debris. 3. Blocked motor housing vents. 4. Motor being strained by long or small diameter extension cord.	1. Allow tool to work at its own rate. 2. Clean or replace Disc or Belt using instructions in this manual. 3. Wear ANSI-approved safety goggles and NIOSH-approved dust mask/respirator while blowing dust out of motor using compressed air. 4. Eliminate use of extension cord. If an extension cord is needed, use one with the proper diameter for its length and load. See **Table A** on page 3.

Follow all safety precautions whenever diagnosing or servicing the tool. Disconnect power supply before service.

PLEASE READ THE FOLLOWING CAREFULLY

THE MANUFACTURER AND/OR DISTRIBUTOR HAS PROVIDED THE COMPONENT LIST AND ASSEMBLY DIAGRAM IN THIS MANUAL AS A REFERENCE TOOL ONLY. NEITHER THE MANUFACTURER OR DISTRIBUTOR MAKES ANY REPRESENTATION OR WARRANTY OF ANY KIND TO THE BUYER THAT HE OR SHE IS QUALIFIED TO MAKE ANY REPAIRS TO THE PRODUCT, OR THAT HE OR SHE IS QUALIFIED TO REPLACE ANY PARTS OF THE PRODUCT. IN FACT, THE MANUFACTURER AND/OR DISTRIBUTOR EXPRESSLY STATES THAT ALL REPAIRS AND PARTS REPLACEMENTS SHOULD BE UNDERTAKEN BY CERTIFIED AND LICENSED TECHNICIANS, AND NOT BY THE BUYER. THE BUYER ASSUMES ALL RISK AND LIABILITY ARISING OUT OF HIS OR HER REPAIRS TO THE ORIGINAL PRODUCT OR REPLACEMENT PARTS THERETO, OR ARISING OUT OF HIS OR HER INSTALLATION OF REPLACEMENT PARTS THERETO.

Component List

Part	Description	Qty
1	Sanding Belt 6x48"	1
2	Bearing Cover	1
3	C-Ring 12mm	1
4	Ball Bearing 6201	1
5	Nut M8	2
6	Lock Washer 8mm	2
7	Drum Cover	2
8	Set Screw M8x10	4
9	Socket Pan Head Screw M6x10	2
10	Sanding Belt Dust Port	1
11	Drive Drum	1
12	Long Machine Key 5x55mm	1
13	Drive Shaft	1
14	Ball Bearing 6003-2ZN	1
15	Bearing Snap Ring	1
16	C-Ring 17mm	1
17	Hex Head Bolt M8x25	4
18	Flat Washer 8mm	4
19	Support Bracket	1
20	Spacer Plate	1
21	Carriage Bolt M8x40	2
22	Belt House	1
23	Set Screw M8x10	1
24	Drive Pulley	1
25	Set Screw M8x10	1
26	Motor Pulley	1
27	Washer 8mm	4
28	Hex Head Bolt M8x12	4
29	V-Belt	1
30	Aluminum Disc	1
31	Set Screw M8x10	1
32	Sanding Disc 9"	1
33	Sanding Disc Dust Port	1
34	Pointer	1
35	Flat Washer 4mm	1
36	Pan Head Screw M4x6	1
37	Miter Gauge Lock Knob	1
38	Flat Washer 6mm	1
39	Miter Gauge	1
40	Guide Bar	1
41	Work Table	1
42	Angle Plate	1
43	Washer 8mm	1
44	Hex Head Bolt M8x12	1
45	Work Table Lock Handle	1
46	Flat Washer 8mm	1
47	Pan Head Screw M5x10	1
48	Flat Washer 5mm	1
49	Pointer	1
50	Set Screw M8x10	2
51	Work Table Support	1
52	Nut	2
53	Flat Head Bolt M5x35	2
54	Nut M5	2
55	Self-Tapping Screw	6
56	Table Support Bar	1
57	Pan Head Screw M5x8	1
58	Lock Washer 5mm	1
59	Flat Washer 5mm	1

Part	Description	Qty
60	Power Cord	1
61	Serriated Washer	1
62	Power Switch	1
63	Thread Forming Screw	2
64	Switch Plate	1
65	Set Screw M8x10	2
66	Base	1
67	Cord Clamp Plate	2
68	Flat Washer 5mm	2
69	Lock Washer 5mm	2
70	Pan Head Screw M5x12	2
71	Switch Box	1
72	Long Top Brace	2
73	Short Top Brace	2
74	Leg	4
75	Long Brace	2
76	Short Brace	2
77	Socket Head Bolt M8x25	4
78	Flat Washer 8mm	8
79	Rubber Foot	4
80	Nut M8	4
81	Carriage Bolt M6x12	24
82	Flat Washer 6mm	24
83	Nut M6	24
84	Hex Head Bolt M8x16	4
85	Lock Washer 8mm	4
86	Flat Washer 8mm	4
87	Nut M8	4
88	Lock Washer 8mm	4
89	Flat Washer 8mm	4
90	Strain Relief	2
91	Hex Head Bolt M8x30	4
92	Set Screw M8x10	2
93	Short Machine Key 5x25mm	1
94	Motor	1
95	Nut M16x1.5	1
96	Support Bar	1
97	Hex Head Bolt M8x25	1
98	Flat Washer 8mm	1
99	Work Stop	1
100	Sanding Belt Frame	1
101	Lock Knob	2
102	Belt Tracking Dial	2
103	Drum Cover	2
104	C-Ring 12mm	2
105	Ball Bearing 6201	2
106	Shaft	1
107	Set Screw M5x6	2
108	Adjusting Shaft	2
109	Idler Drum	1
110	Pan Head Screw M4x8	2
111	Flat Washer 4mm	2
112	Wrench Storage	1
113	Nut M4	2
114	Open End Wrench 10-13mm	1
115	Hex Wrench 4mm	1
116	Belt Guard	1
117	Lock Knob M8x8	2

Assembly Diagram

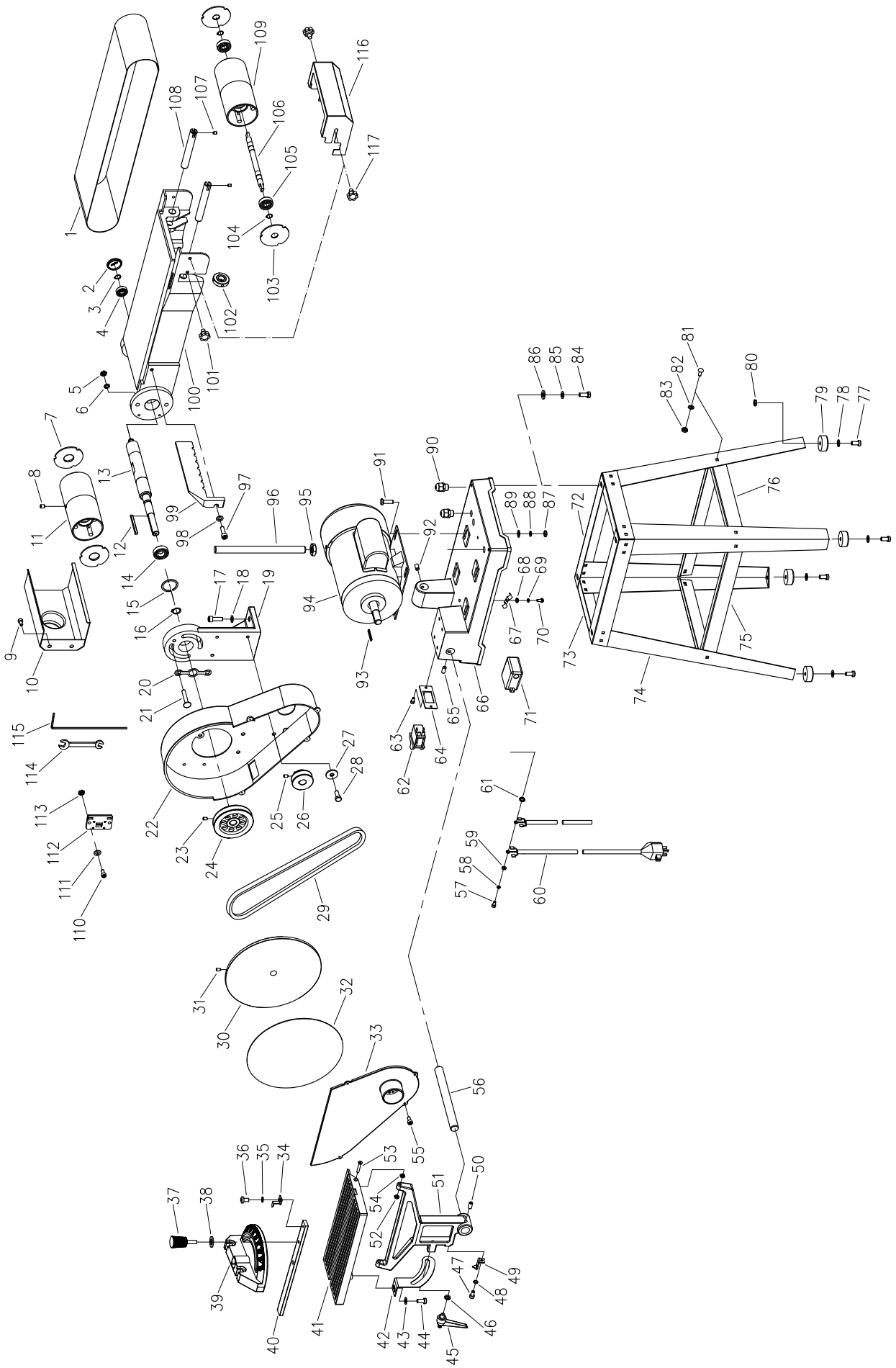

Record Product's Date Code Here:_____

Note: If product has no Date Code, record month and year of purchase instead.

Note: The component list and assembly diagram are shown for reference only.
To view all currently available replacement parts, please visit harborfreight.com/parts
Specify UPC 193175601193 when ordering parts.

Limited 90 Day Warranty

Harbor Freight Tools Co. makes every effort to assure that its products meet high quality and durability standards, and warrants to the original purchaser that this product is free from defects in materials and workmanship for the period of 90 days from the date of purchase. This warranty does not apply to damage due directly or indirectly, to misuse, abuse, negligence or accidents, repairs or alterations outside our facilities, criminal activity, improper installation, normal wear and tear, or to lack of maintenance. We shall in no event be liable for death, injuries to persons or property, or for incidental, contingent, special or consequential damages arising from the use of our product. Some states do not allow the exclusion or limitation of incidental or consequential damages, so the above limitation of exclusion may not apply to you. THIS WARRANTY IS EXPRESSLY IN LIEU OF ALL OTHER WARRANTIES, EXPRESS OR IMPLIED, INCLUDING THE WARRANTIES OF MERCHANTABILITY AND FITNESS.

To take advantage of this warranty, the product or part must be returned to us with transportation charges prepaid. Proof of purchase date and an explanation of the complaint must accompany the merchandise. If our inspection verifies the defect, we will either repair or replace the product at our election or we may elect to refund the purchase price if we cannot readily and quickly provide you with a replacement. We will return repaired products at our expense, but if we determine there is no defect, or that the defect resulted from causes not within the scope of our warranty, then you must bear the cost of returning the product.

This warranty gives you specific legal rights and you may also have other rights which vary from state to state.

CENTRAL®
MACHINERY

For product assistance, visit harborfreight.com/customer-support/contact-us