HERCULES®

Owner's Manual & Safety Instructions

24c

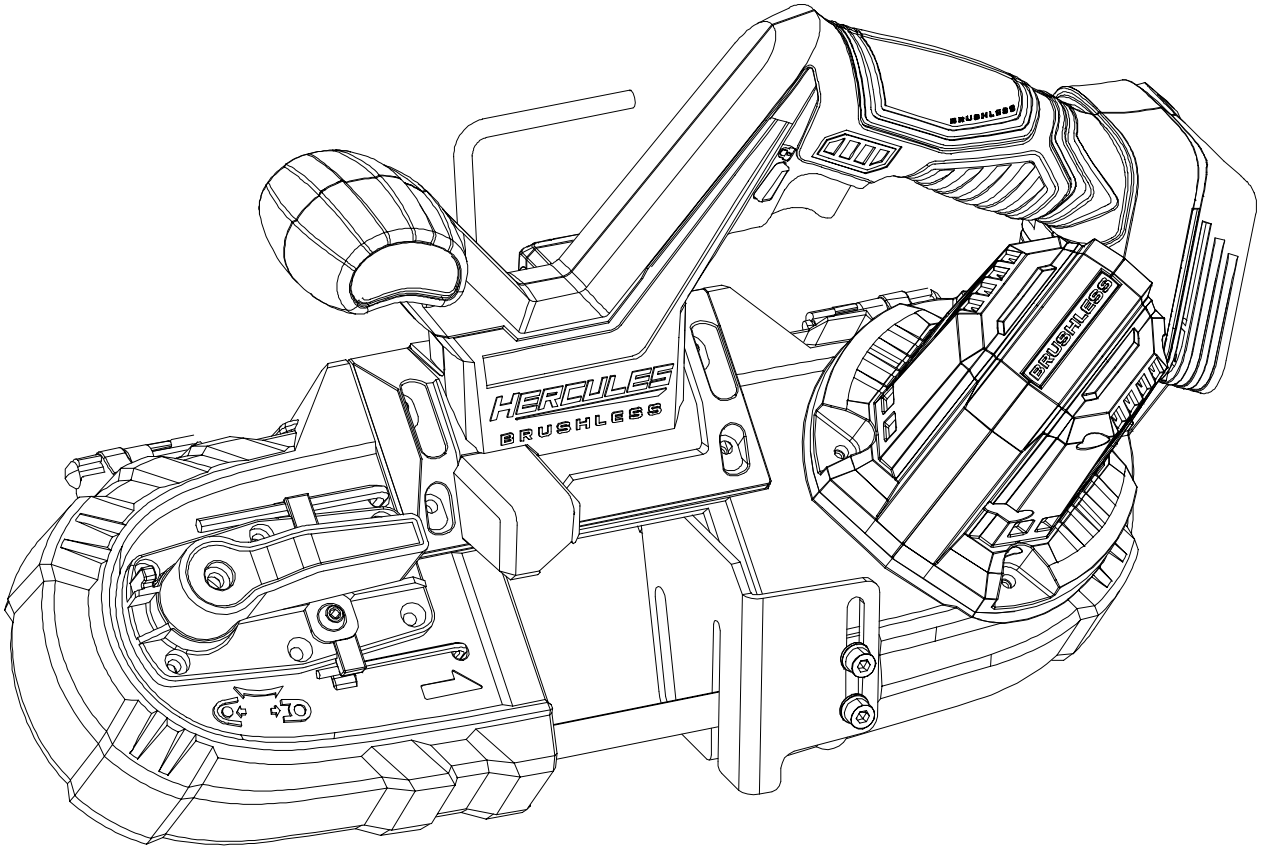

Blade Sold Separately

Model
HCB790B

Battery and Charger Sold Separately

20V 2-1/2" Variable-Speed Brushless Compact Band Saw

⚠WARNING: To prevent serious injury, User must read and understand Owner's Manual. SAVE THIS MANUAL.

When unpacking, make sure that the product is intact and undamaged.
If any parts are missing or broken, please call 1-888-866-5797
as soon as possible. Reference 59796.

IMPORTANT SAFETY INFORMATION

GENERAL POWER TOOL SAFETY WARNINGS

⚠WARNING

Read all safety warnings and all instructions. *Failure to follow the warnings and instructions may result in electric shock, fire and/or serious injury.*
Save all warnings and instructions for future reference.
The term "power tool" in the warnings refers to your battery-operated (cordless) power tool.

Work Area Safety

1. **Keep work area clean and well lit.** *Cluttered or dark areas invite accidents.*
2. **Do not operate power tools in explosive atmospheres, such as in the presence of flammable liquids, gases or dust.** *Power tools create sparks which may ignite the dust or fumes.*
3. **Keep children and bystanders away while operating a power tool.** *Distractions can cause you to lose control.*

Electrical Safety

Do not expose power tools to rain or wet conditions. *Water entering a power tool will increase the risk of electric shock.*

Personal Safety

1. **Stay alert, watch what you are doing and use common sense when operating a power tool. Do not use a power tool while you are tired or under the influence of drugs, alcohol or medication.** *A moment of inattention while operating power tools may result in serious personal injury.*
2. **Use personal protective equipment. Always wear eye protection.** Protective *equipment such as dust mask, non-skid safety shoes, hard hat, or hearing protection used for appropriate conditions will reduce personal injuries.*
3. **Prevent unintentional starting. Ensure the Trigger is in the off-position before connecting to power source, picking up or carrying the tool.** *Carrying power tools with your finger on the Trigger or energizing power tools that have the Trigger on invites accidents.*
4. **Remove any adjusting key or wrench before turning the power tool on.** *A wrench or a key left attached to a rotating part of the power tool may result in personal injury.*
5. **Do not overreach. Keep proper footing and balance at all times.** *This enables better control of the power tool in unexpected situations.*
6. **Dress properly. Do not wear loose clothing or jewelry. Keep your hair, clothing and gloves away from moving parts.** *Loose clothes, jewelry or long hair can be caught in moving parts.*
7. **Do not let familiarity gained from frequent use of tools allow you to become complacent and ignore tool safety principles.** *A careless action can cause severe injury within a fraction of a second.*
8. Only use safety equipment that has been approved by an appropriate standards agency. Unapproved safety equipment may not provide adequate protection. Eye protection must be ANSI-approved and breathing protection must be NIOSH-approved for the specific hazards in the work area.
9. Avoid unintentional starting. Prepare to begin work before turning on the tool.
10. Do not lay the tool down until it has come to a complete stop. Moving parts can grab the surface and pull the tool out of your control.
11. When using a handheld power tool, maintain a firm grip on the tool with both hands to resist starting torque.
12. Do not leave the tool unattended when the Battery Pack is connected. Turn off the tool, and remove the Battery Pack before leaving.
13. This product is not a toy. Keep it out of reach of children.
14. People with pacemakers should consult their physician(s) before use. Electromagnetic fields in close proximity to heart pacemaker could cause pacemaker interference or pacemaker failure.
15. The warnings, precautions, and instructions discussed in this instruction manual cannot cover all possible conditions and situations that may occur. It must be understood by the operator that common sense and caution are factors which cannot be built into this product, but must be supplied by the operator.

Power tool use and care

1. **Do not force the power tool. Use the correct power tool for your application.** *The correct power tool will do the job better and safer at the rate for which it was designed.*
2. **Do not use the power tool if the Trigger does not turn it on and off.** *Any power tool that cannot be controlled with the Trigger is dangerous and must be repaired.*
3. **Disconnect the battery pack from the power tool before making any adjustments, changing accessories, or storing power tools.** *Such preventive safety measures reduce the risk of starting the power tool accidentally.*

4. **Store idle power tools out of the reach of children and do not allow persons unfamiliar with the power tool or these instructions to operate the power tool.** *Power tools are dangerous in the hands of untrained users.*
5. **Maintain power tools and accessories. Check for misalignment or binding of moving parts, breakage of parts and any other condition that may affect the power tool's operation. If damaged, have the power tool repaired before use.** *Many accidents are caused by poorly maintained power tools.*
6. **Keep cutting tools sharp and clean.** *Properly maintained cutting tools with sharp cutting edges are less likely to bind and are easier to control.*
7. **Use the power tool, accessories and tool bits etc. in accordance with these instructions, taking into account the working conditions and the work to be performed.** *Use of the power tool for operations different from those intended could result in a hazardous situation.*
8. **Keep handles and grasping surfaces dry, clean and free from oil and grease.** *Slippery handles and grasping surfaces do not allow for safe handling and control of the tool in unexpected situations.*

Service

1. **Have your power tool serviced by a qualified repair person using only identical replacement parts.** *This will ensure that the safety of the power tool is maintained.*
2. **Never service damaged BATTERY packs.** *Service of BATTERY packs should only be performed by the manufacturer or authorized service providers.*
3. Maintain labels and nameplates on the tool. These carry important safety information. If unreadable or missing, contact Harbor Freight Tools for a replacement.

Battery Tool use and care

1. **Prevent unintentional starting.** *Ensure the switch is Prevent unintentional starting. Ensure the switch is in the off-position before connecting to battery pack, picking up or carrying the power tool. Carrying the power tool with your finger on the switch or energizing power tool that have the switch on invites accidents.*
2. **Disconnect the battery pack from the power tool before making any adjustments, changing accessories, or storing power tool.** *Such preventive safety measures reduce the risk of starting the power tool accidentally.*
3. **Recharge only with the charger specified by the manufacturer.** *A charger that is suitable for one type of battery pack may create a risk of fire when used with another battery pack.*
4. **Use power tools only with specifically designated battery packs.** *Use of any other battery packs may create a risk of injury and fire.*
5. **When battery pack is not in use, keep it away from other metal objects, like paper clips, coins, keys, nails, screws or other small metal objects, that can make a connection from one terminal to another.** *Shorting the battery terminals together may cause burns or a fire.*
6. **Under abusive conditions, liquid may be ejected from the battery; avoid contact.** *If contact accidentally occurs, flush with water. If liquid contacts eyes, additionally seek medical help. Liquid ejected from the battery may cause irritation or burns.*
7. **Do not use a battery pack or power tool that is damaged or modified.** *Damaged or modified batteries may exhibit unpredictable behavior resulting in fire, explosion or risk of injury.*
8. **Do not expose a battery pack or power tool to fire or excessive temperature.** *Exposure to fire or temperature above 140°F may cause explosion.*
9. **Follow all charging instructions and do not charge the battery pack or power tool outside of the temperature range specified in the instructions.** *Charging improperly or at temperatures outside of the specified range may damage the battery and increase the risk of fire.*
10. **Have servicing performed by a qualified repair person using only identical replacement parts.** *This will ensure that the safety of the product is maintained.*
11. **Do not modify or attempt to repair the power tool or the battery pack except as indicated in the instructions for use and care.**
12. The battery Charger gets hot during use. The Charger's heat can build up to unsafe levels and create a fire hazard if it does not receive adequate ventilation, due to an electrical fault, or if it is used in a hot environment. Do not place the Charger on a flammable surface. Do not obstruct any vents on the Charger. **Especially avoid placing the Charger on carpets and rugs; they are not only flammable, but they also obstruct vents under the Charger.** Place the Charger on a stable, solid, nonflammable surface (such as a stable metal workbench or concrete floor) at least 1 foot away from all flammable objects, such as drapes or walls. Keep a fire extinguisher and a smoke detector in the area. Frequently monitor the Charger and Battery Pack while charging.

Band Saw Safety Warnings

1. **Hold power tool by insulated gripping surfaces, when performing an operation where the cutting accessory may contact hidden wiring.** *Cutting accessories contacting a "live" wire may make exposed metal parts of the power tool "live" and could give the operator an electric shock.*
2. Use clamps or another practical way to secure and support the workpiece to a stable platform. Holding the work by hand or against your body leaves it unstable and may lead to loss of control.
3. Do not leave power tool unattended while it is running.
4. Before each use, move the Tension Lever to the tightened position (making the blade taut).
5. Work slowly and carefully to avoid snagging when cutting near corners, sharp edges, ragged welds, etc.
6. Cutting material and the motor housing can get very hot during operation. Stop work until tool and blade both cool down to safe temperature.

Lithium Battery Safety Warnings

LITHIUM BATTERIES STORE A LARGE AMOUNT OF ENERGY AND WILL VENT FIRE OR EXPLODE IF MISTREATED:

1. **Keep Battery Pack dry.**
2. **DO NOT DO ANY OF THE FOLLOWING TO THE BATTERY PACK:**
   - **Open,**
   - **Drop,**
   - **Short-circuit,**
   - **Puncture,**
   - **Incinerate, or**
   - **Expose to temperatures greater than 140°F.**
3. Charge Battery Pack only according to instructions.
4. Inspect Battery Pack before every use; do not use or charge if damaged.

Vibration Safety

This tool vibrates during use.
Repeated or long-term exposure to vibration may cause temporary or permanent physical injury, particularly to the hands, arms and shoulders.
To reduce the risk of vibration-related injury:

1. Anyone using vibrating tools regularly or for an extended period should first be examined by a doctor and then have regular medical check-ups to ensure medical problems are not being caused or worsened from use. Pregnant women or people who have impaired blood circulation to the hand, past hand injuries, nervous system disorders, diabetes, or Raynaud's Disease should not use this tool. If you feel any symptoms related to vibration (such as tingling, numbness, and white or blue fingers), seek medical advice as soon as possible.
2. Do not smoke during use. Nicotine reduces the blood supply to the hands and fingers, increasing the risk of vibration-related injury.
3. Wear suitable gloves to reduce the vibration effects on the user.
4. Use tools with the lowest vibration when there is a choice.
5. Include vibration-free periods each day of work.
6. Grip tool as lightly as possible (while still keeping safe control of it). Let the tool do the work.
7. To reduce vibration, maintain the tool as explained in this manual. If any abnormal vibration occurs, stop use immediately.

GROUNDING

⚠WARNING

TO PREVENT ELECTRIC SHOCK AND DEATH FROM INCORRECT GROUNDING: Check with a qualified electrician if you are in doubt as to whether the outlet is properly grounded. Do not modify the power cord plug provided with the charger. Do not use the charger if the power cord or plug is damaged. If damaged, have it repaired by a service facility before use. If the plug will not fit the outlet, have a proper outlet installed by a qualified electrician.

Extension Cords

Note: Extension cords must not be used with this item's Charger.

Warning Symbols and Definitions

This is the safety alert symbol. It is used to alert you to potential personal injury hazards. Obey all safety messages that follow this symbol to avoid possible injury or death.

⚠ DANGER **Indicates a hazardous situation which, if not avoided, will result in death or serious injury.**

⚠WARNING **Indicates a hazardous situation which, if not avoided, could result in death or serious injury.**

⚠CAUTION **Indicates a hazardous situation which, if not avoided, could result in minor or moderate injury.**

NOTICE **Addresses practices not related to personal injury.**

Symbology

V	Volts
⎓	Direct Current
A	Amperes
n_0 xxxx/min.	No Load Revolutions per Minute (RPM)
	WARNING marking concerning Risk of Eye Injury. Wear ANSI-approved safety goggles with side shields.
	Read the manual before set-up and/or use.
	WARNING marking concerning Risk of Fire. Do not cover Charger ventilation ducts. Charge on fireproof surface only.
	WARNING marking concerning Risk of Electric Shock. Properly connect Charger's power cord to appropriate outlet. WARNING marking concerning Risk of Explosion. Do not puncture, short, or open battery packs and do not charge damaged battery packs.

SPECIFICATIONS

Battery Type	Hercules 20V Li-ion 57373 (sold separately)
Charger Type	Hercules 20V/12V Li-ion 56559 (sold separately)
Electrical Rating	20VDC
Blade Speed	100 - 635 SFPM
Blade Size	32-7/8" x 1/2"
Max. Cutting Capacity	2-1/2" x 2-1/2"

HERCULES®

SETUP - BEFORE USE

Read the <u>ENTIRE</u> IMPORTANT SAFETY INFORMATION section at the beginning of this manual including all text under subheadings therein before set up or use.

Functions

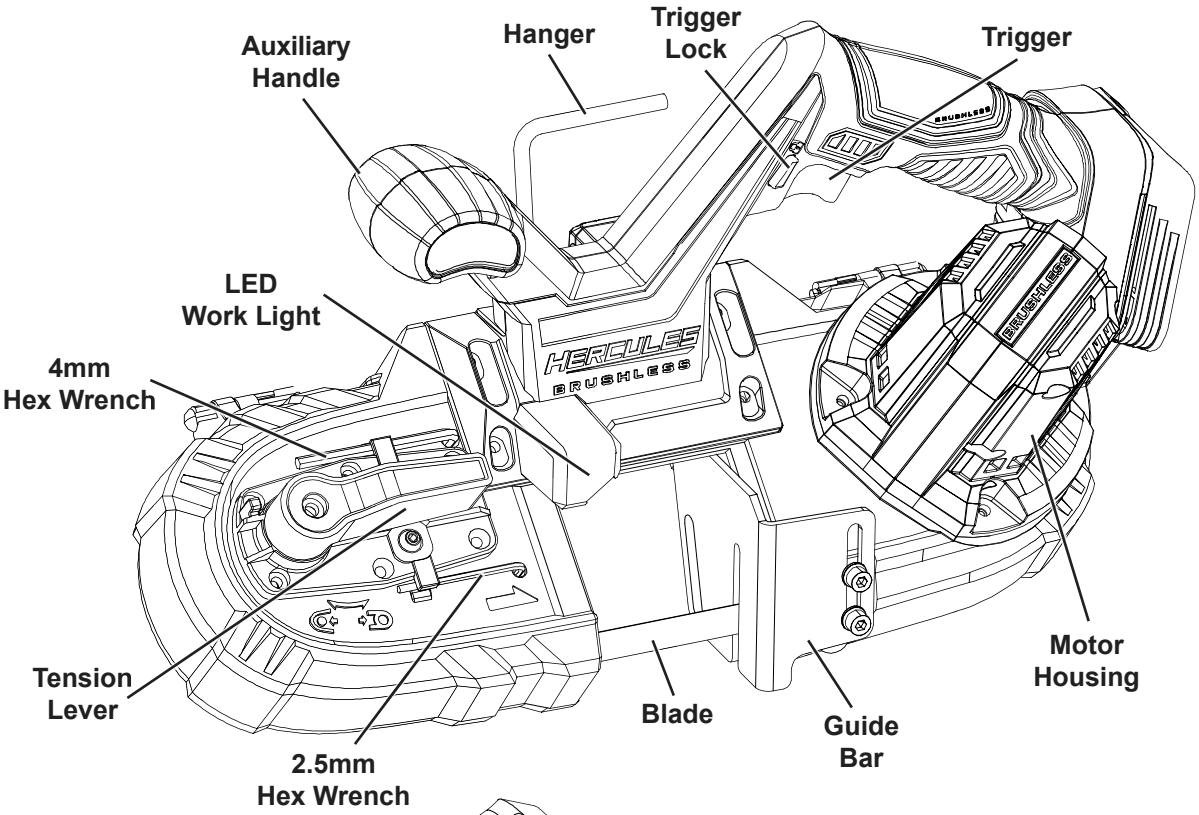

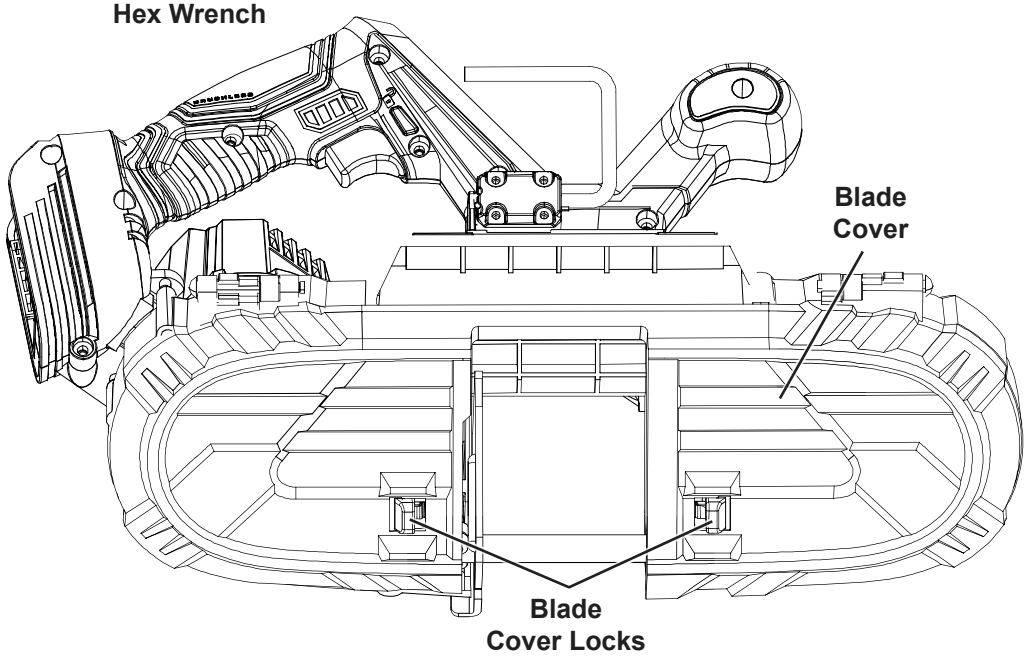

OPERATING INSTRUCTIONS

Read the ENTIRE IMPORTANT SAFETY INFORMATION section at the beginning of this manual including all text under subheadings therein before set up or use of this product.

Tool Set Up

WARNING

TO PREVENT SERIOUS INJURY FROM ACCIDENTAL OPERATION:
Make sure that the Trigger is in the off-position and remove its Battery Pack before performing any procedure in this section.

WARNING

TO PREVENT SERIOUS INJURY:
Wear ANSI-approved safety goggles, heavy-duty work gloves, and heavy-duty long-sleeved shirt or coat whenever handling or working near the Blade.
The Blade can suddenly spring out during service.

Charging

Charge battery after unpacking and before using this tool. Follow instructions included with battery charger.

Blade Selection

WARNING! TO PREVENT SERIOUS INJURY FROM BLADE COMING LOOSE, ONLY USE BLADES OF THE SPECIFIED SIZE.

Select the proper Blade according to the cutting material and the diameter or size of the workpiece.

This Band Saw accepts **32-7/8″ x 1/2″** Blades. (Blade sold separately).

Common Blade Applications		
Teeth Per Inch		Use
	3-4	Wood, resawing (ripping).
	10-14	Stainless steel, angle iron, pipe, tubing, plastic, wood 1/4" or thicker.
	14-18	Stainless steel, angle iron, pipe, tubing, plastic, wood 1/8" to 1/4".
	24	Stainless steel, angle iron, pipe, tubing, plastic, wood 1/8" or thinner.

Blade Installation and Replacement

WARNING

TO PREVENT SERIOUS INJURY FROM ACCIDENTAL OPERATION:
Make sure that the Trigger is in the off-position and remove its Battery Pack before installing or removing a saw Blade.

1. Push the Blade Cover Locks inward and rotate the Blade Cover away.

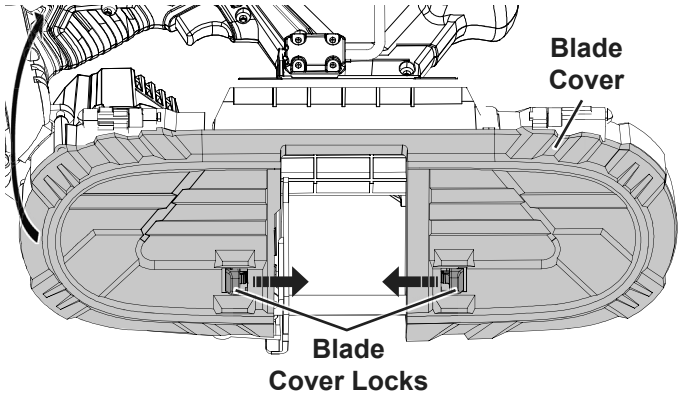

2. Set the Frame so that the edge of the used Blade is pointing away from you. (Once Blade tension is released, it may spring off quickly.)
3. Turn the Tension Lever to release Blade tension. Slide old Blade off Blade Wheels.

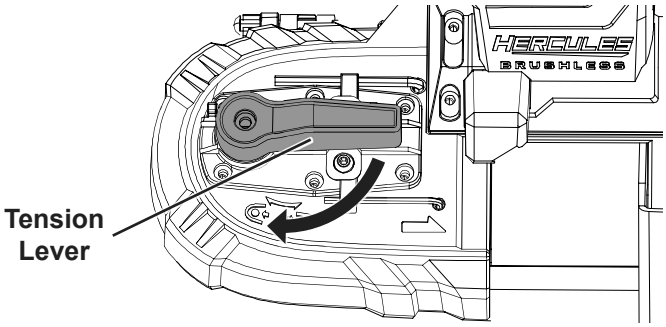

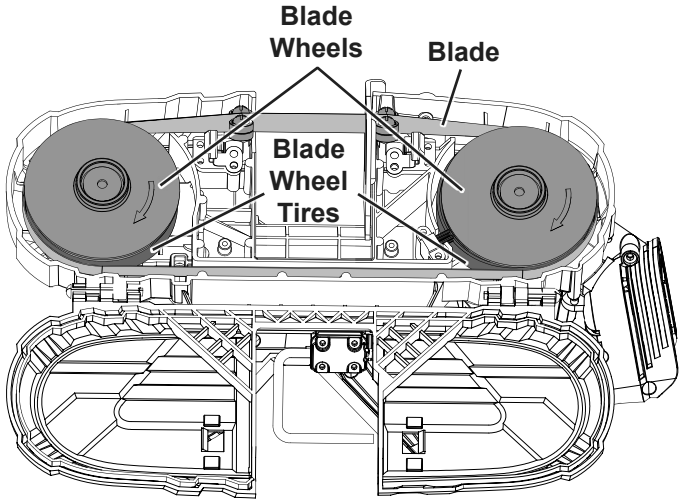

Note: Install Blade with teeth pointing upward, facing you.

4. Set the Blade into both Guide Bearings and center it on them.

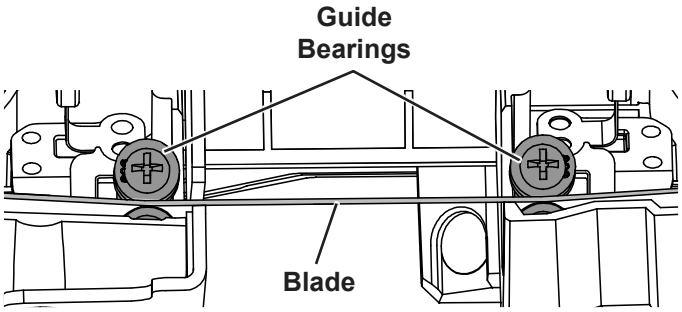

WARNING! TO PREVENT SERIOUS INJURY: BEFORE EACH USE, PUT THE TENSION LEVER IN THE TIGHTENED POSITION (MAKING THE BLADE TAUT), AS FOLLOWS:

5. Make sure the Blade is centered on the Guide Bearings and fits evenly around the Blade Wheels.
6. Turn the Tension Lever until the Blade is taut and the Lever is in tightened position.

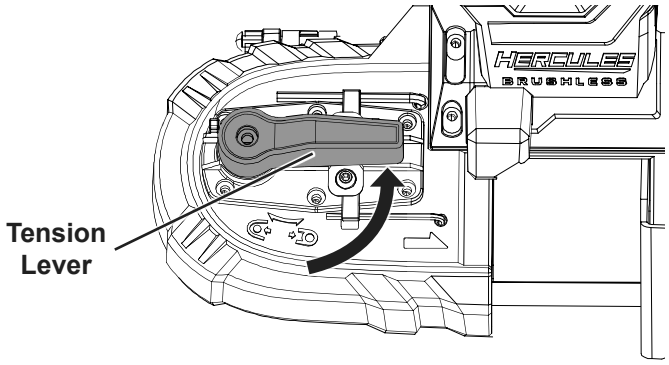

7. Put on eye and hearing protection, then stay clear of the blade while attaching the Battery Pack. Briefly run the tool for 2-3 seconds.
8. Allow the Band Saw to come to a complete stop before setting it down.
9. Inspect the Blade. If Blade is positioned off center on Blade Wheels, adjust Blade position as described in *Adjusting Blade Tracking* on page 10.
10. Close the Blade Cover. Make sure it is held securely by the Blade Cover Locks.

Guide Bar Adjustment

1. Loosen Cap Screws with 4mm Hex Wrench (included).
2. Adjust Guide Bar up or down so Guide Bar butts up against rear of workpiece while blade is cutting through workpiece.
3. Tighten Cap Screws with 4mm Hex Wrench.

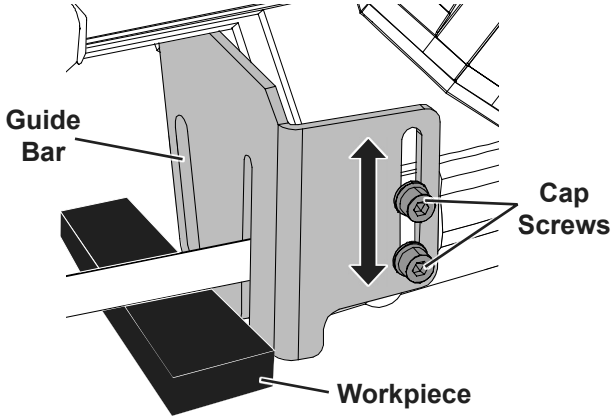

Workpiece and Work Area Set Up

1. Designate a work area that is clean and well-lit. The work area must not allow access by children or pets to prevent distraction and injury.
2. Secure loose workpieces using a vise or clamps (not included) to prevent movement while working.
3. Verify that there are no utility lines or hardware in or near the workpiece.

General Operating Instructions

1. Make sure that the Trigger is in the off-position and locked, then attach the Battery Pack.
2. Make all necessary adjustments to the Band Saw.
3. Secure your workpiece to a workbench or other solid surface.
4. Firmly grip the Main Handle with one hand and the Auxiliary Handle with the other hand.
5. Set the Guide Bar against the workpiece, keeping Blade at a slight angle to the workpiece.

WARNING! TO PREVENT SERIOUS INJURY OR DAMAGE TO PROPERTY: Do not start the Band Saw if the Blade is in contact with anything.

6. Push Trigger Lock to left to unlock Trigger, then squeeze Trigger and allow tool to come up to full speed before starting the cut.

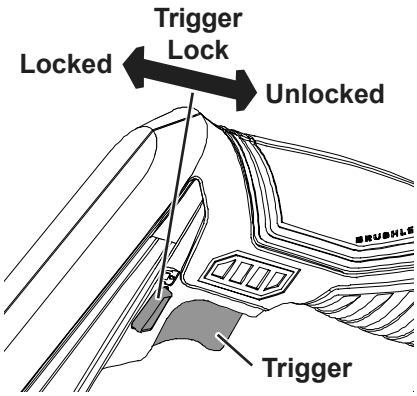

7. To increase speed, apply more pressure to Trigger. To decrease speed, apply less pressure.

Note: When cutting softer materials, use a faster speed. When cutting harder materials, use a slower speed.

WARNING! TO PREVENT SERIOUS INJURY: Exposed Blade in Band Saw underside. Hold Band Saw away from body.

8. Tilt the unit so that the Blade is vertical. To start a cut, use minimal force to start a groove. Once groove is started, allow the rest of the Blade to cut into workpiece. Doing this will prevent Blade from moving from side-to-side during cutting.

CAUTION! TO PREVENT PROPERTY DAMAGE AND INJURY: Do not apply force to the tool by pressing too hard with your hands or leaning into it. The weight of the tool itself creates enough force to make a clean cut. Forcing or leaning on the tool may twist or break the Blade, damaging the saw and possibly causing injury.

9. As you reach the end of your workpiece, finish off the cut by slightly raising the unit slowly, bringing the blade up.
10. To stop the Band Saw, release the Trigger and push Trigger lock to right to lockout Trigger.
11. Allow the Band Saw to come to a complete stop before setting it down.
12. To prevent accidents, turn off the tool and remove its Battery Pack after use. Clean, then store the tool indoors out of children's reach.

HERCULES®

MAINTENANCE AND SERVICING

Procedures not specifically explained in this manual must be performed only by a qualified technician.

⚠WARNING

TO PREVENT SERIOUS INJURY FROM ACCIDENTAL OPERATION: Release the Trigger and remove the Battery Pack before performing any procedure in this section.

TO PREVENT SERIOUS INJURY FROM TOOL FAILURE:
Do not use damaged equipment.
If abnormal noise or vibration occurs, have the problem corrected before further use.

Cleaning, Maintenance, and Lubrication

1. **BEFORE EACH USE,** inspect the general condition of the tool. Check for:
   - leaking, swollen, or cracked battery pack,
   - loose hardware,
   - misalignment or binding of moving parts,
   - cracked or broken parts,
   - damaged electrical wiring,
   - any other condition that may affect its safe operation.
2. **AFTER USE,** wipe external surfaces of the tool with clean cloth.
3. **TO CLEAN:** The ventilation openings should be kept clean and free of dirt and debris. Wear ANSI-approved safety goggles and NIOSH-approved dust mask/respirator before cleaning ducts. The most effective way to clean the ventilation openings is with compressed air.
4. If not using the tool for long periods of time, remove the Blade.
5. For Blade installation, replacement, or tensioning, reference *Blade Installation and Replacement* on page 7.
6. Li-Ion BATTERY MUST BE RECYCLED OR DISPOSED OF PROPERLY.
   Do not short, incinerate or open battery.
7. Disconnect battery pack and store battery pack, charger, and tool in dry, indoor area out of reach of children and away from metal objects (i.e., paperclips, coins) to prevent shorting.

Adjusting Blade Tracking

1. Using 2.5mm Hex Wrench (included):
   a. To move the Blade down turn Adjustment Screws 1/4 turn CLOCKWISE.
   b. To move the Blade up turn Adjustment Screws 1/4 turn COUNTERCLOCKWISE.

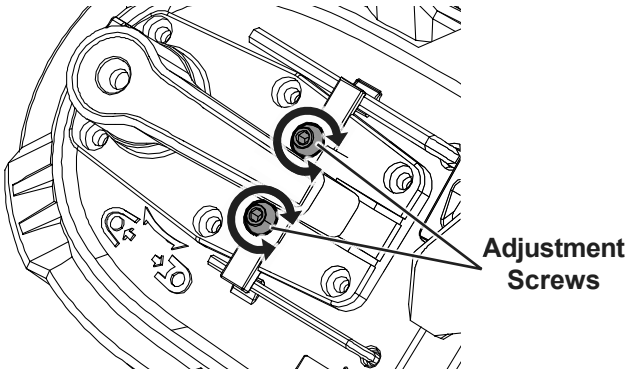

2. Put on eye and hearing protection, then stay clear of the blade while attaching the Battery Pack. Briefly run the tool for 2-3 seconds.
3. Allow the Band Saw to come to a complete stop before setting it down.
4. Inspect the Blade. If Blade is still positioned off center, repeat adjustment.

Record Product's Serial Number Here:_____

Note: If product has no serial number, record month and year of purchase instead.

Note: Replacement parts may be available for this item.
Visit **harborfreight.com/parts** for a list of in stock parts. Reference UPC 193175485670.

Troubleshooting

Problem	Possible Causes	Likely Solutions
Tool will not start.	1. Battery Pack not properly connected. 2. Battery Pack not properly charged. 3. Battery Pack worn-out. 4. Internal damage or wear. (Trigger, for example.)	1. Remove Battery Pack, make sure there are no obstructions, reinsert the Battery Pack according to its shape (it should only fit one way), and press firmly until the Battery Pack locks in place. 2. Make sure Charger is connected and operating properly. Give enough time for Battery Pack to recharge properly. 3. Dispose of old Battery Pack properly or recycle. Replace Battery Pack. 4. Have technician service tool.
Tool operates slowly.	1. Excess pressure applied to workpiece. 2. Battery Pack power low. 3. Battery Pack wearing out.	1. Decrease pressure; allow tool to do the work. 2. Recharge Battery Pack. 3. Dispose of old Battery Pack properly or recycle. Replace Battery Pack.
Performance decreases over time.	1. Blade dull or damaged. 2. Battery Pack wearing out.	1. Keep Blade sharp. Replace as needed. 2. Dispose of old Battery Pack properly or recycle. Replace Battery Pack.
Excessive/ grinding/odd noise or rattling.	1. Blade not centered on Blade Wheels. 2. Internal damage or wear (bearings, for example.)	1. Center Blade on Blade Wheels as described in *Adjusting Blade Tracking* on page 10. 2. Have technician service tool.
Blade tracks to Blade Pulley side or falls off.	Blade not centered on Blade Wheels.	Center Blade on Blade Wheels as described in *Adjusting Blade Tracking on page 10*.
Overheating.	1. Forcing tool to work too fast. 2. Blade dull or damaged. 3. Blocked motor housing vents.	1. Allow tool to work at its own rate. 2. Keep Blade sharp. Replace as needed. 3. Wear ANSI-approved safety goggles and NIOSH-approved dust mask/respirator while blowing dust out of motor using compressed air.
Cuts are not straight	1. Blade is not 90° to workpiece. 2. Dull Blade. 3. Guide Bar is misaligned/loose.	1. Reference operating instructions in the *General Operating Instructions on page 9*. 2. Replace Blade. 3. Adjust Guide Bar as described in *Guide Bar Adjustment on page 8*.
Blade dulling too rapidly	1. Blade is too coarse. 2. Hard spots on material. 3. Blade installed backwards.	1. Use a finer tooth Blade. 2. Increase pressure more gently on object being cut. 3. Remove Blade and turn inside out before reinstalling.
Frequent Saw Blade Breakage	1. Blade is too coarse for workpiece being cut. 2. Guide Bar is misaligned/loose. 3. Possible Blade Weld Cracking. 4. Blade not centered on Blade Wheels	1. Use a Saw Blade with a finer pitch. 2. Readjust Guide Bar as described in *Guide Bar Adjustment* on page 8. 3. Replace the Saw Blade. 4. Center Blade on Blade Wheels as described in *Adjusting Blade Tracking* on page 10.
Workpiece cuts appear rough	1. Workpiece being fed into Saw Blade to fast. 2. Blade is too coarse for material being cut.	1. Slow down the speed at which you are feeding material through the blade. 2. Use a blade with a finer pitch.

Follow all safety precautions whenever diagnosing or servicing the tool. Disconnect power supply before service.

5-YEAR LIMITED WARRANTY

This Hercules tool is warranted to the original purchaser to be free from defects in materials and workmanship for a period of five (5) years beginning on the date of purchase. This warranty does not cover battery packs and battery chargers, which are covered under separate warranties. To obtain warranty service, visit your local Harbor Freight retail store. Warranty registration is not required. The product or part must be returned to us with proof of purchase (e.g. in-store receipt or packing slip/invoice) and may require shipment by purchaser to a service center at purchaser's expense. If our inspection verifies a covered defect in materials or workmanship during the warranty period, we will, at our option, repair or replace the defective product. We will return repaired products within a reasonable time at our expense, but if we determine that there is no defect, or that the defect resulted from causes not within the scope of our warranty, then we will return the product to you if you pay return shipping costs.

This warranty does not cover any failure or damage that we determine is due directly or indirectly to normal wear and tear, misuse, use not for the intended purpose or not in accordance with the product manual, abuse, accident, rental, modification or alteration, unauthorized repair, improper installation, neglect, lack of maintenance, or any other failure not arising from defective materials or workmanship. Fraudulent returns or claims will be denied. The repair or replacement described in this warranty shall be your sole and exclusive remedy. THIS WARRANTY IS EXCLUSIVE AND IN LIEU OF ALL OTHER EXPRESS WARRANTIES, WRITTEN OR ORAL, AND ANY IMPLIED WARRANTIES ARE DISCLAIMED TO THE EXTENT PERMITTED BY LAW AND OTHERWISE LIMITED TO THE DURATION OF THE EXPRESS WARRANTY HEREIN. HARBOR FREIGHT SHALL NOT BE LIABLE UNDER ANY CIRCUMSTANCES FOR ANY INCIDENTAL, INDIRECT, SPECIAL, CONSEQUENTIAL, OR PUNITIVE DAMAGES OR COSTS ARISING FROM THIS WARRANTY OR THE USE OF THIS PRODUCT. SOME STATES DO NOT ALLOW LIMITATIONS ON HOW LONG AN IMPLIED WARRANTY LASTS OR THE EXCLUSION OR LIMITATION OF INCIDENTAL OR CONSEQUENTIAL DAMAGES, SO THESE LIMITATIONS MAY NOT APPLY TO YOU. THIS WARRANTY GIVES YOU SPECIFIC LEGAL RIGHTS, AND YOU MAY ALSO HAVE OTHER RIGHTS WHICH VARY FROM STATE TO STATE.

Visit our website at: http://www.harborfreight.com
Email our technical support at: productsupport@harborfreight.com
For technical questions, please call 1-888-866-5797

Copyright© 2023 by Harbor Freight Tools®. All rights reserved. No portion of this manual or any artwork contained herein may be reproduced in any shape or form without the express written consent of Harbor Freight Tools. Diagrams within this manual may not be drawn proportionally. Due to continuing improvements, actual product may differ slightly from the product described herein. Tools required for assembly and service may not be included.

HERCULES®

26677 Agoura Road • Calabasas, CA 91302 • 1-888-866-5797