Owner's Manual & Safety Instructions

Save This Manual Keep this manual for the safety warnings and precautions, assembly, operating, inspection, maintenance and cleaning procedures. Write the product's serial number in the back of the manual near the assembly diagram (or month and year of purchase if product has no number). Keep this manual and the receipt in a safe and dry place for future reference.

CHICAGO ELECTRIC POWER TOOLS

ITEM 62382

1.5 HORSEPOWER

7" BRIDGE TILE SAW

Note: Diamond Blade sold separately.

Visit our website at: http://www.harborfreight.com

Email our technical support at: productsupport@harborfreight.com

REV 14g

When unpacking, make sure that the product is intact and undamaged. If any parts are missing or broken, please call 1-888-866-5797 as soon as possible.

Copyright© 2014 by Harbor Freight Tools®. All rights reserved.
No portion of this manual or any artwork contained herein may be reproduced in any shape or form without the express written consent of Harbor Freight Tools.
Diagrams within this manual may not be drawn proportionally. Due to continuing improvements, actual product may differ slightly from the product described herein. Tools required for assembly and service may not be included.

⚠WARNING

Read this material before using this product. Failure to do so can result in serious injury. SAVE THIS MANUAL.

Table of Contents

Safety 3
Setup - Before Use: 8
Setup 8
Operation 10
Maintenance 12
Parts Lists and Diagrams 14
Warranty 20

SAFETY

SETUP

OPERATION

MAINTENANCE

CHICAGO ELECTRIC® POWER TOOLS

WARNING SYMBOLS AND DEFINITIONS	
⚠	This is the safety alert symbol. It is used to alert you to potential personal injury hazards. Obey all safety messages that follow this symbol to avoid possible injury or death.
⚠ DANGER	Indicates a hazardous situation which, if not avoided, will result in death or serious injury.
⚠ WARNING	Indicates a hazardous situation which, if not avoided, could result in death or serious injury.
⚠ CAUTION	Indicates a hazardous situation which, if not avoided, could result in minor or moderate injury.
NOTICE CAUTION	Addresses practices not related to personal injury.

IMPORTANT SAFETY INFORMATION

General Tool Safety Warnings

⚠WARNING

Read all safety warnings and instructions.
Failure to follow the warnings and instructions may result in electric shock, fire and/or serious injury.
Save all warnings and instructions for future reference.

1. KEEP GUARDS IN PLACE and in working order.
2. REMOVE ADJUSTING KEYS AND WRENCHES. Form habit of checking to see that keys and adjusting wrenches are removed from tool before turning it on.
3. KEEP WORK AREA CLEAN. Cluttered areas and benches invite accidents.
4. DON'T USE IN DANGEROUS ENVIRONMENT. Don't use power tools in damp or wet locations, or expose them to rain. Keep work area well lighted.
5. KEEP CHILDREN AWAY. All visitors should be kept safe distance from work area.
6. MAKE WORKSHOP KID PROOF with padlocks, master switches, or by removing starter keys.
7. DON'T FORCE TOOL. It will do the job better and safer at the rate for which it was designed.
8. USE RIGHT TOOL. Don't force tool or attachment to do a job for which it was not designed.

Table A: RECOMMENDED MINIMUM WIRE GAUGE FOR EXTENSION CORDS (120 VOLT)

NAMEPLATE AMPERES (at full load)	EXTENSION CORD LENGTH			
	25′	50′	100′	150′
0 – 6	18	16	16	14
6.1 – 10	18	16	14	12
10.1 – 12	16	16	14	12
12.1 – 16	14	12	**Do not use.**	

9. USE PROPER EXTENSION CORD. Make sure your extension cord is in good condition. When using an extension cord, be sure to use one heavy enough to carry the current your product will draw. An undersized cord will cause a drop in line voltage resulting in loss of power and overheating. Table A shows the correct size to use depending on cord length and nameplate ampere rating. If in doubt, use the next heavier gauge. The smaller the gauge number, the heavier the cord.
10. WEAR PROPER APPAREL. Do not wear loose clothing, gloves, neckties, rings, bracelets, or other jewelry which may get caught in moving parts. Nonslip footwear is recommended. Wear protective hair covering to contain long hair.
11. ALWAYS USE SAFETY GLASSES. Also use face or dust mask if cutting operation is dusty. Everyday eyeglasses only have impact resistant lenses, they are NOT safety glasses.
12. SECURE WORK. Use clamps or a vise to hold work when practical. It's safer than using your hand and it frees both hands to operate tool.
13. DON'T OVERREACH. Keep proper footing and balance at all times.
14. MAINTAIN TOOLS WITH CARE. Keep tools sharp and clean for best and safest performance. Follow instructions for lubricating and changing accessories.
15. DISCONNECT TOOLS before servicing; when changing accessories, such as blades, bits, cutters, and the like.
16. REDUCE THE RISK OF UNINTENTIONAL STARTING. Make sure switch is in off position before plugging in.
17. USE RECOMMENDED ACCESSORIES. Consult the owner's manual for recommended accessories. The use of improper accessories may cause risk of injury to persons.
18. NEVER STAND ON TOOL. Serious injury could occur if the tool is tipped or if the cutting tool is unintentionally contacted.
19. CHECK DAMAGED PARTS. Before further use of the tool, a guard or other part that is damaged should be carefully checked to determine that it will operate properly and perform its intended function – check for alignment of moving parts, binding of moving parts, breakage of parts, mounting, and any other conditions that may affect its operation. A guard or other part that is damaged should be properly repaired or replaced.
20. DIRECTION OF FEED. Feed work into a blade or cutter against the direction of rotation of the blade or cutter only.
21. NEVER LEAVE TOOL RUNNING UNATTENDED. TURN POWER OFF. Don't leave tool until it comes to a complete stop.

Grounding Instructions

⚠WARNING

TO PREVENT ELECTRIC SHOCK AND DEATH FROM INCORRECT GROUNDING WIRE CONNECTION READ AND FOLLOW THESE INSTRUCTIONS:

110-120 VAC Grounded Tools: Tools with Three Prong Plugs

1. In the event of a malfunction or breakdown, grounding provides a path of least resistance for electric current to reduce the risk of electric shock. This tool is equipped with an electric cord having an equipment-grounding conductor and a grounding plug. The plug must be plugged into a matching outlet that is properly installed and grounded in accordance with all local codes and ordinances.
2. Do not modify the plug provided – if it will not fit the outlet, have the proper outlet installed by a qualified electrician.
3. Improper connection of the equipment-grounding conductor can result in a risk of electric shock. The conductor with insulation having an outer surface that is green with or without yellow stripes is the equipment-grounding conductor. If repair or replacement of the electric cord or plug is necessary, do not connect the equipment-grounding conductor to a live terminal.
4. Check with a qualified electrician or service personnel if the grounding instructions are not completely understood, or if in doubt as to whether the tool is properly grounded.
5. Use only 3-wire extension cords that have 3-prong grounding plugs and 3-pole receptacles that accept the tool's plug.
6. Repair or replace damaged or worn cord immediately.

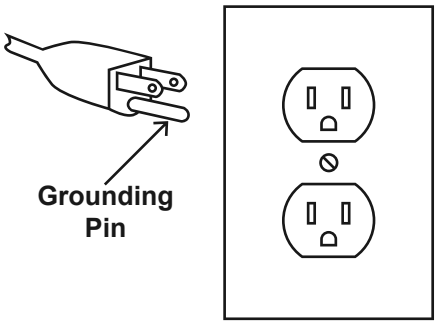

125 VAC 3-Prong Plug and Outlet (for up to 125 VAC and up to 15 A)

7. This tool is intended for use on a circuit that has an outlet that looks like the one illustrated above in **125 VAC 3-Prong Plug and Outlet**. The tool has a grounding plug that looks like the plug illustrated above in **125 VAC 3-Prong Plug and Outlet**.
8. The outlet must be properly installed and grounded in accordance with all codes and ordinances.
9. Do not use an adapter to connect this tool to a different outlet.

Tile Saw Safety Warnings

For Your Own Safety Read Instruction Manual Before Operating Saw

1. Wear eye protection.
2. Use saw-blade guard and spreader for every operation for which it can be used, including all through sawing.
3. Keep hands out of the line of saw blade.
4. Use an appropriate push-stick when required.
5. Know how to reduce risk of kickback.
6. Do not perform any operation freehand.
7. Never reach around or over saw blade.
8. Make sure the workpiece is supported at all times while sawing.
9. To properly understand all safety warnings, be familiar with the following safety terms and equipment:
   a. Featherboard – A block with "fingers" that hold the workpiece against the fence while sawing.
   b. Through-sawing – A cut made from one side of a tile to the opposite side, without stopping.
   c. Freehand – Feeding a workpiece through the saw without using a fence or guided support to guide it. **NOT A SAFE METHOD.**
   d. Kerf – The gap made by the saw in the workpiece.
   e. Kickback – A sudden reaction to a pinched, bound, or misaligned blade, causing an uncontrolled workpiece to lift up and out of the saw toward the operator.

f. Spreader – A metal plate that follows the saw blade to keep the kerf (gap) from closing on the saw blade. Spreaders, except riving knives, must be aligned to the blade after blade adjustment to prevent binding.

g. Riving Knife – A spreader mounted on the same mechanism as the blade. Generally more effective than simple spreaders.

10. As noted previously, **Kickback** is a sudden reaction to a pinched, bound, or misaligned blade, causing an uncontrolled workpiece to lift up and out of the saw toward the operator. Kickback is usually a result of tool misuse and can be limited or avoided by following the precautions below:
    - Fence must be completely parallel to the saw blade.
    - Workpiece must be free from flaws and from foreign objects.

11. Do not use a dull or damaged blade.

12. Maintain control of the workpiece. Do not allow the workpiece to rest against the moving blade without holding onto it.
    - If the blade binds or a cut is interrupted, turn off the power switch and hold the workpiece still until the blade stops. Correct the cause of blade binding before proceeding.
    - Before continuing an unfinished cut, center the blade in the pre-cut kerf and check that the saw is not engaged into the workpiece before turning on the saw.
    - Push the tile past the blade prior to release.

13. Check guards for proper operation with saw disconnected from power before each use. Do not disable any guard. Do not operate saw if any movable guard does not move freely and close instantly. Make sure any movable guard does not touch the blade in all angles, depths of cut, and positions.

14. Keep the guard in place while through-sawing. Verify that the spreader lines up with the blade to prevent binding.

15. **POSITION OF TILE SAW**

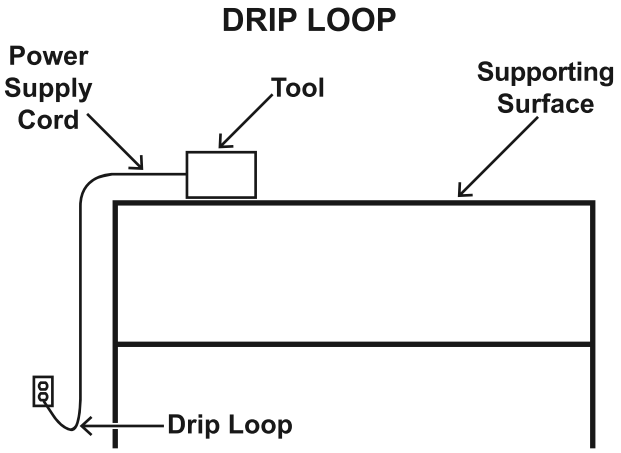

1. To avoid the possibility of the tool plug or receptacle getting wet, position tile saw to one side of a wall mounted receptacle to prevent water from dripping onto the receptacle or plug. The user should arrange a “drip loop” in the cord connecting the saw to a receptacle. The “drip loop” is that part of the cord below the level of the receptacle, or the connector if an extension cord is used, to prevent water traveling along the cord and coming in contact with the receptacle.

2. If the plug or receptacle does get wet, DON’T unplug the cord. Disconnect the fuse or circuit breaker that supplies power to the tool. Then unplug and examine for presence of water in the receptacle.

EXTENSION CORDS

3. Use only extension cords that are intended for outdoor use. These extension cords are identified by a marking “Acceptable for use with outdoor tools; store indoors while not in use.” Use only extension cords having an electrical rating not less than the rating of the product. Do not use damaged extension cords. Examine extension cord before using and replace if damaged. Do not abuse extension cords and do not yank on any cord to disconnect. Keep cord away from heat and sharp edges. Always disconnect the extension cord from the receptacle before disconnecting the product from the extension cord.

4. WARNING – To reduce the risk of electrocution, keep all connections dry and off the ground. Do not touch plug with wet hands.

5. Ground Fault Circuit Interrupter (GFCI) protection should be provided on the circuit(s) or outlet(s) to be used for the tile saw. Receptacles are available having built-in GFCI protection and may be used for this measure of safety.

6. **DO NOT OPERATE WITH ANY GUARD DISABLED, DAMAGED, OR REMOVED. Moving guards must move freely and close instantly.**

7. The use of accessories or attachments not recommended by the manufacturer may result in a risk of injury to persons.

8. When servicing use only identical replacement parts.

9. Do not depress the spindle lock when starting or during operation.

10. Only use safety equipment that has been approved by an appropriate standards agency. Unapproved safety equipment may not provide adequate protection. Eye protection must be ANSI-approved and breathing protection must be NIOSH-approved for the specific hazards in the work area.

11. Stay alert, watch what you are doing and use common sense when operating a power tool. Do not use a power tool while you are tired or under the influence of drugs, alcohol or medication. A moment of inattention while operating power tools may result in serious personal injury.

12. Industrial applications must follow OSHA guidelines.

13. Maintain labels and nameplates on the tool. These carry important safety information. If unreadable or missing, contact Harbor Freight Tools for a replacement.

14. Avoid unintentional starting. Prepare to begin work before turning on the tool.

15. People with pacemakers should consult their physician(s) before use. Electromagnetic fields in close proximity to heart pacemaker could cause pacemaker interference or pacemaker failure.

16. WARNING: Some dust created by power sanding, sawing, grinding, drilling, and other construction activities, contains chemicals known to the State of California to cause cancer and birth defects or other reproductive harm. Some examples of these chemicals are:
    - Lead from lead-based paints
    - Crystalline silica from bricks and cement or other masonry products
    - Arsenic and chromium from chemically treated lumber

    Your risk from these exposures varies, depending on how often you do this type of work. To reduce your exposure to these chemicals: work in a well ventilated area, and work with approved safety equipment, such as those dust masks that are specially designed to filter out microscopic particles. (California Health & Safety Code § 25249.5, *et seq.*)

17. WARNING: The cord of this product contains lead, a chemical known to the State of California to cause cancer, and birth defects or other reproductive harm. Wash hands after handling. (California Health & Safety Code § 25249.5, *et seq.*)

18. The warnings, precautions, and instructions discussed in this instruction manual cannot cover all possible conditions and situations that may occur. It must be understood by the operator that common sense and caution are factors which cannot be built into this product, but must be supplied by the operator.

Vibration Safety

This tool vibrates during use. Repeated or long-term exposure to vibration may cause temporary or permanent physical injury, particularly to the hands, arms and shoulders. To reduce the risk of vibration-related injury:

1. Anyone using vibrating tools regularly or for an extended period should first be examined by a doctor and then have regular medical check-ups to ensure medical problems are not being caused or worsened from use. Pregnant women or people who have impaired blood circulation to the hand, past hand injuries, nervous system disorders, diabetes, or Raynaud's Disease should not use this tool. If you feel any medical or physical symptoms related to vibration (such as tingling, numbness, and white or blue fingers), seek medical advice as soon as possible.

2. Do not smoke during use. Nicotine reduces the blood supply to the hands and fingers, increasing the risk of vibration-related injury.

3. Use tools with the lowest vibration when there is a choice between different processes.

4. Include vibration-free periods each day of work.

5. Grip workpiece as lightly as possible (while still keeping safe control of it). Let the tool do the work.

6. To reduce vibration, maintain the tool as explained in this manual. If any abnormal vibration occurs, stop use immediately.

SAVE THESE INSTRUCTIONS.

Specifications

Electrical Rating	120VAC / 60Hz / 10A
Motor No Load Speed	5000 RPM
Max. Accessory Diameter	7″
Arbor Size	5/8″
Tilting Head	45° Left-Tilt only
Water Pump Max. Flow	160 GPH
Stand (Item 98328)	Sold separately
Blade Type	7″ Diamond Blade (Wet or Dry), 5/8″ arbor, continuous rim (free of openings and grooves) (sold separately)

Intertek
3092372

CHICAGO ELECTRIC®
POWER TOOLS

Setup - Before Use:

Read the ENTIRE IMPORTANT SAFETY INFORMATION section at the beginning of this manual including all text under subheadings therein before set up or use of this product.

WARNING

TO PREVENT SERIOUS INJURY FROM ACCIDENTAL OPERATION:
Turn the Power Switch of the tool off and unplug the tool from its electrical outlet before performing any procedure in this section.

Note: For additional information regarding the parts listed in the following pages, refer to the Assembly Diagram near the end of this manual.

Assembly

1. Attach the Handle (B13) onto the Holder (B09) turned as shown, using the two supplied Screws (B12) and Washers (B11). See Figure A.

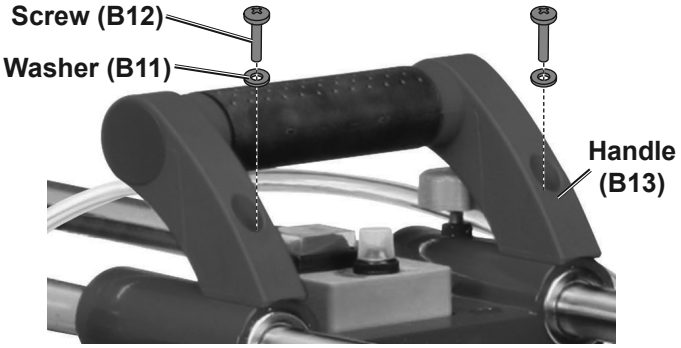

Figure A

2. Check that the water pump (A25) is properly installed within its holding clips. See Figure B.

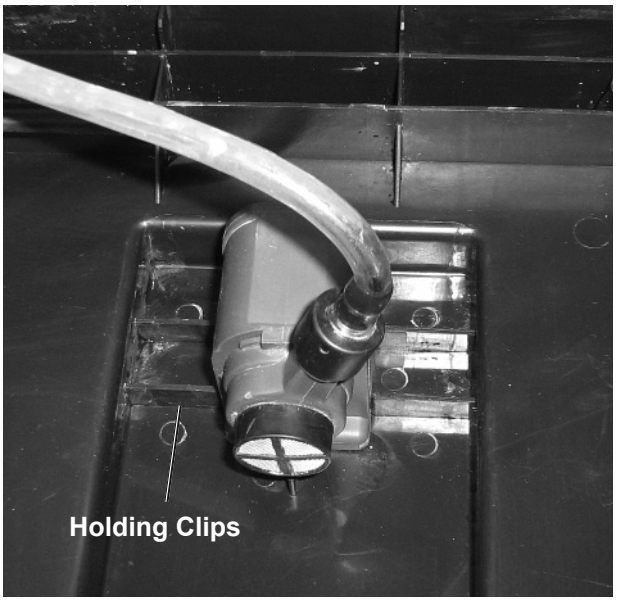

Figure B

3. Run the water hose from the pump discharge to the Blade Cover (A30) and connect it.

Mounting

1. Mount the tool to a workbench or other stable surface.
2. The ideal method is to mount the tile saw on the stand made for it, ITEM 98328 (sold separately).

Functions

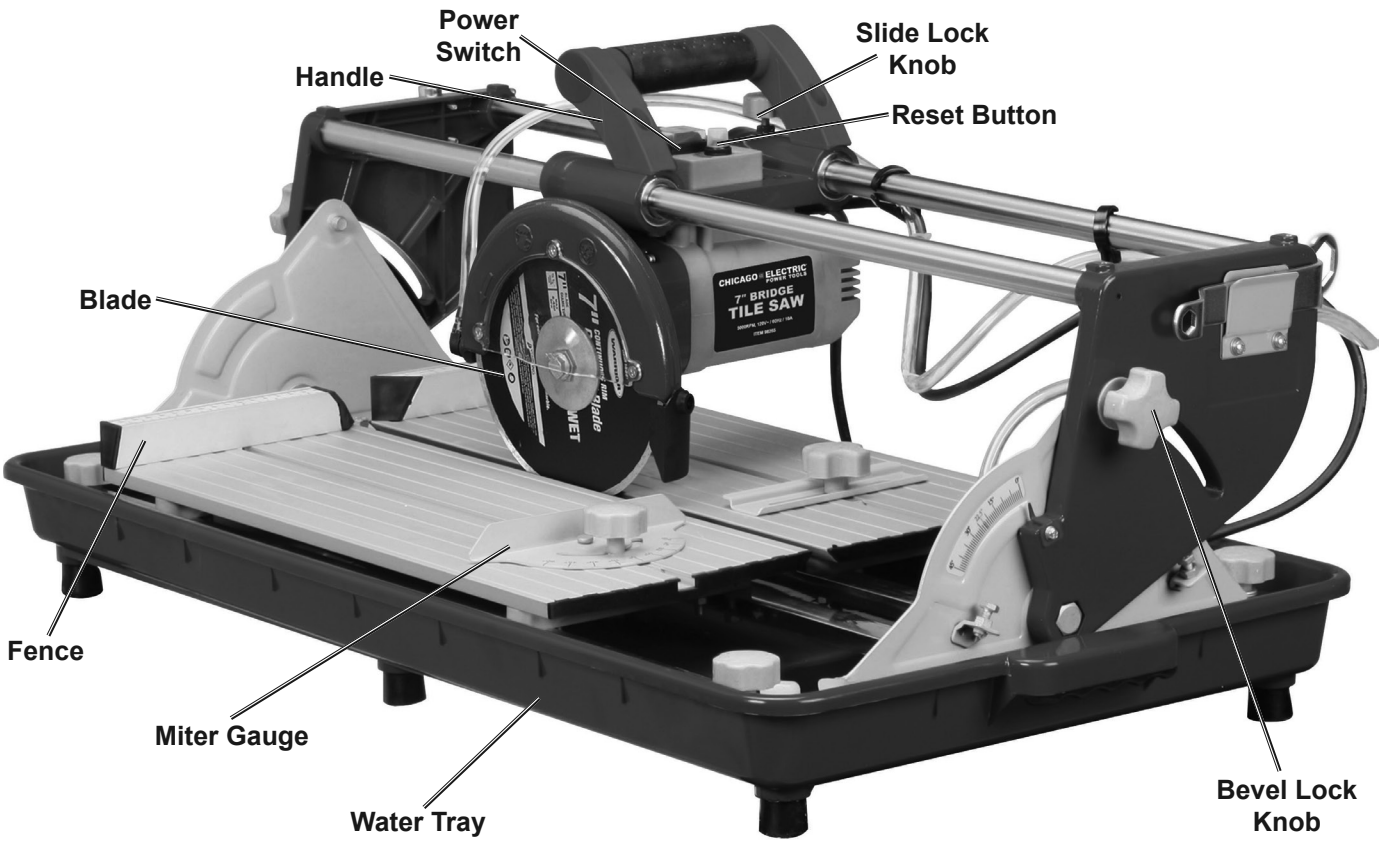

CHICAGO ELECTRIC® POWER TOOLS

Read the ENTIRE IMPORTANT SAFETY INFORMATION section at the beginning of this manual including all text under subheadings therein before set up or use of this product.

Tool Set Up

WARNING

TO PREVENT SERIOUS INJURY FROM ACCIDENTAL OPERATION:
Turn the Power Switch of the tool off and unplug the tool from its electrical outlet before performing any procedure in this section.

TO PREVENT SERIOUS INJURY:
DO NOT OPERATE WITH ANY GUARD DISABLED, DAMAGED, OR REMOVED.
Moving guards must move freely and close instantly.

Installing a Blade

1. Disconnect the power supply.
2. Push the carriage to the open end of the water tray to the right of where the Worktables end (D06).
3. Remove the three Screws (A26) that hold the Clear Guard to the Blade Guard. See Figure C.
4. Put the flat wrench over the Outer Flange (A33) to keep the Blade from turning. Remove the Arbor Bolt (A32) by turning it counterclockwise.
5. Remove the Blade (if installed) and replace with a new one. The new Blade must be 7″ in diameter with a 5/8″ arbor, free of openings and grooves, and rated to at least 5,000 RPM. Match the arrow on the Blade with the arrow on the Blade cover.
6. With the flat wrench in place again, reinstall the Arbor Bolt, tightening it securely clockwise.
7. Replace the Clear Guard and secure with the three Screws.

Figure C

Workpiece and Work Area Set Up

1. Designate a work area that is clean and well-lit. The work area must not allow access by children or pets to prevent distraction and injury.
2. Route the power cord along a safe route to reach the work area without creating a tripping hazard or exposing the power cord to possible damage. The power cord must reach the work area with enough extra length to allow free movement while working.
3. Secure loose workpieces using a vise or clamps (not included) to prevent movement while working.
4. There must not be objects, such as utility lines, nearby that will present a hazard while working.

General Operating Instructions

1. Make sure that the Switch is in the off-position, then plug in the tool.
2. Turn on the tool.
3. Use two hands and hold workpiece securely against table and fence at all times.
4. When making a flat cut, slide the piece to be cut up against the Fence securely. See Figure E.
5. When making an angled cut, position one end securely at the point where the two Fence halves come together. Use the Clamp Plate to secure it. The cut-off side of the workpiece must be free to move away from the blade to prevent binding.
6. With the saw and the water pump turned on and operating, pull Handle to move blade through material at a slow and steady pace.

CAUTION! Do not attempt to cut on a push stroke, the blade may grab the workpiece.

7. Beveled cuts can also be accomplished by loosening the Knobs on either side of the saw. Tilt the Sliding Supports, and blade/motor assembly as a unit. There is a scale and indexing pointer on the Sliding Supports indicating angle of tilt. See Figure D.

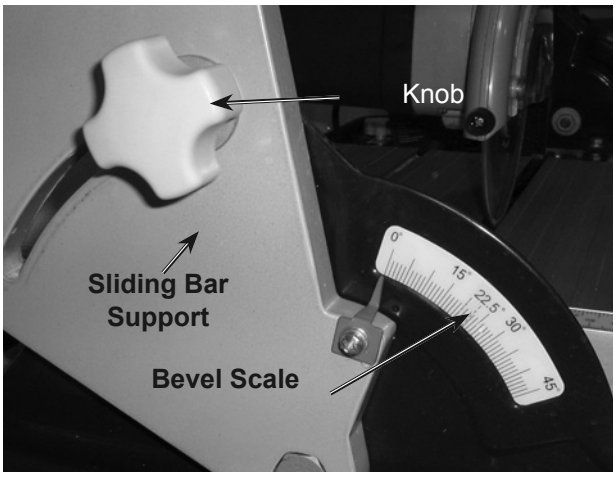

Figure D

8. To prevent accidents, turn off the tool and unplug the tool from its electrical outlet after use. Clean, then store the tool indoors out of children's reach.

Figure E: Straight Cutting

Procedures not specifically explained in this manual must be performed only by a qualified technician.

⚠WARNING

TO PREVENT SERIOUS INJURY FROM ACCIDENTAL OPERATION:
Turn the Power Switch of the tool off and unplug the tool from its electrical outlet before performing any procedure in this section.

TO PREVENT SERIOUS INJURY FROM TOOL FAILURE:
Do not use damaged equipment. If abnormal noise or vibration occurs, have the problem corrected before further use.

Cleaning, Maintenance, and Lubrication

1. **BEFORE EACH USE,** inspect the general condition of the tool. Check for:
   - loose hardware,
   - misalignment or binding of moving parts,
   - cracked or broken parts,
   - damaged electrical wiring, and
   - any other condition that may affect its safe operation.
2. **AFTER USE,** wipe external surfaces of the tool with clean cloth. Drain water from the water tray and wash out any residue from the sump pump.
3. **⚠WARNING! If the supply cord of this power tool is damaged, it must be replaced only by a qualified service technician.**

Cleaning the Saw

1. With the saw turned off and the cord pulled out from the outlet, wipe down all of the external parts of the unit with a damp (not dripping wet) sponge.
2. Make sure that the Water Tray is also cleaned and a container of some type is located below the Drain Plug (E03). Remove the plug and drain the water and silt accumulated by the cutting operation.
3. Use more water to clean out the residual silt from the water tray.
4. Replace the Drain Plug. Check condition of the O-Ring (E02) and replace if torn or cut.
5. The cleaning process is faster and easier if the unit is tipped on end and carefully (do not wet the motor) hosed down.
6. Wipe the entire unit down including the sides and Sliding Bars (C16).
7. Clean out the pump by removing the Filter (A26), placing the pump into a container of clean water, and running it to pump out any remaining silt. Back flush the screen Filter (A26) and replace onto the pump.

Troubleshooting

Problem	Possible Causes	Likely Solutions
Tool will not start.	1. Cord not connected.	1. Check that cord is plugged in.
	2. No power at outlet.	2. Check power at outlet. If outlet is unpowered, turn off tool and check circuit breaker. If breaker is tripped, make sure circuit is right capacity for tool and circuit has no other loads.
	3. Tool's thermal reset breaker tripped (if equipped).	3. Turn off tool and allow to cool. Press reset button on tool.
	4. Internal damage or wear. (Carbon brushes or switch, for example.)	4. Have technician service tool.
Tool operates slowly.	1. Extension cord too long or wire size too small.	1. Eliminate use of extension cord. If an extension cord is needed, use one with the proper diameter for its length and load. See **Table A** on page 3.
	2. Arbor shaft binding.	2. Check that shaft spins freely.
	3. Internal damage or wear. (Carbon brushes, for example.)	3. Have technician service tool.
Performance decreases over time.	1. Accessory dull or damaged.	1. Keep cutting accessories sharp. Replace as needed.
	2. Carbon brushes worn or damaged.	2. Have qualified technician replace brushes.
Excessive noise or rattling.	1. Bent or off-balance blade.	1. Replace blade with new one.
	2. Bent Arbor Shaft.	2. Check shaft for run-out.
	3. Internal damage or wear. (Carbon brushes or bearings, for example.)	3. Have technician service tool.
Overheating.	1. Water flow problem.	1. Check connection.
	2. Not enough water.	2. Add proper amount of water.
	3. Running with hot/warm water.	3. Always run with cold water.
	4. Forcing machine to work too fast.	4. Allow machine to work at its own rate.
	5. Accessory misaligned.	5. Check and correct accessory to fence and/or table alignment.
	6. Accessory dull or damaged.	6. Keep cutting accessories sharp. Replace as needed.
	7. Blocked motor housing vents.	7. Wear ANSI-approved safety goggles and NIOSH-approved dust mask/respirator while blowing dust out of motor using compressed air.
	8. Motor being strained by long or small diameter extension cord.	8. Eliminate use of extension cord. If an extension cord is needed, use one with the proper diameter for its length and load. See **Table A** on page 3.
Restricted carriage travel.	1. Dry or damaged Holder.	1. Lubricate or service Holder components.
	2. Bent Sliding Bars.	2. Replace Sliding Bars.

Follow all safety precautions whenever diagnosing or servicing the tool.
Disconnect power supply before service.

PLEASE READ THE FOLLOWING CAREFULLY

THE MANUFACTURER AND/OR DISTRIBUTOR HAS PROVIDED THE PARTS LIST AND ASSEMBLY DIAGRAM IN THIS MANUAL AS A REFERENCE TOOL ONLY. NEITHER THE MANUFACTURER OR DISTRIBUTOR MAKES ANY REPRESENTATION OR WARRANTY OF ANY KIND TO THE BUYER THAT HE OR SHE IS QUALIFIED TO MAKE ANY REPAIRS TO THE PRODUCT, OR THAT HE OR SHE IS QUALIFIED TO REPLACE ANY PARTS OF THE PRODUCT. IN FACT, THE MANUFACTURER AND/OR DISTRIBUTOR EXPRESSLY STATES THAT ALL REPAIRS AND PARTS REPLACEMENTS SHOULD BE UNDERTAKEN BY CERTIFIED AND LICENSED TECHNICIANS, AND NOT BY THE BUYER. THE BUYER ASSUMES ALL RISK AND LIABILITY ARISING OUT OF HIS OR HER REPAIRS TO THE ORIGINAL PRODUCT OR REPLACEMENT PARTS THERETO, OR ARISING OUT OF HIS OR HER INSTALLATION OF REPLACEMENT PARTS THERETO.

Record Product's Serial Number Here:_____

Note: If product has no serial number, record month and year of purchase instead.

Note: Some parts are listed and shown for illustration purposes only, and are not available individually as replacement parts.

Parts List and Diagram A - Motor

Part	Description	Qty
A01	Screw (M5x12)	5
A02	Hose Connect	1
A03	Water Tubing	1
A04	Spring Washer	5
A05	Inner Flange	1
A06	Bearing (6202Rt)	1
A07	Washer(14)	1
A08	Bearing (628-R)	1
A09	Grounding Wire	1
A10	Front Motor Cover	1
A11	Outer Teeth Washer	2
A12	Screw (M4x8)	2
A13	Guard	1
A14	Screw(St3.5x15)	5
A15	Water Seal	1
A16	Power Switch	1
A17	Seal	1
A18	Cap	2

Part	Description	Qty
A19	Switch Body	1
A20	Thermal Protector	1
A21	Press Plate	2
A22	Joint	1
A23	Cord	1
A24	Water Pump Connector	1
A25	Pump	1
A26	Filter	1
A27	Cover	1
A28	Screw(M4x12)	3
A29	Water Pad	1
A30	Blade Cover	1
A31	Rubber Gasket	1
A32	Hex Bolt(M8x15)	1
A33	Outer Flange	1
A34	Blade	1
A35	Bearing Cover	1
A36	Shaft	1

Part	Description	Qty
A37	Key	1
A38	Gear	1
A39	Screw (St4x30)	4
A40	Screw Assy (St3.8x63)	1
A41	Clip	1
A42	Stator	1
A43	Bearing (6001-Rt)	1
A44	Rotor	1
A45	Bearing (608-Rt)	1
A46	Bearing Cover	1
A47	Motor Housing	1
A48	Carbon Brush Cover	2
A49	Carbon Brush	2
A50	Brush Housing	2
A51	Motor Cover	1
A52	Screw (St4x15)	4
A53	Flat Washer	5

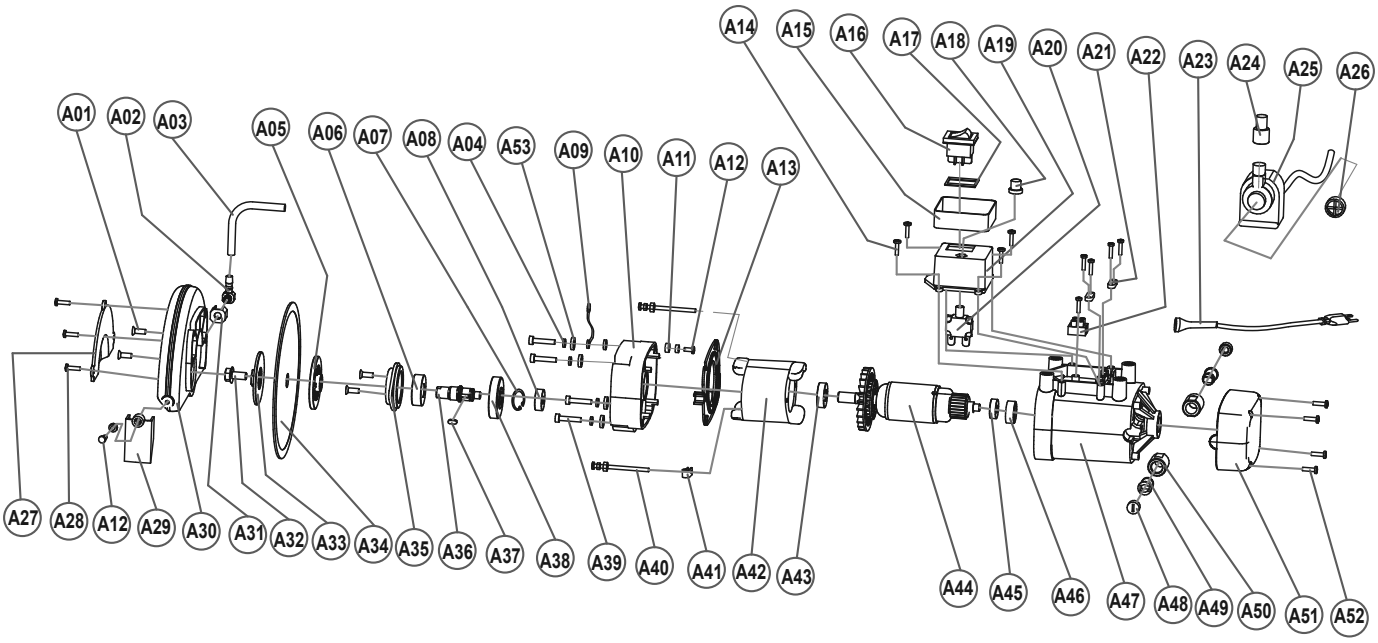

Parts List and Diagram B - Hanger

Part	Description	Qty.
B01	Screw (M4x6)	3
B02	Screw (M4x20)	1
B03	Hex Nut (M4)	1
B04	Linear Bushing	2
B05	Felt Bushing	4
B06	Seal	4
B07	Bearing	2
B08	Hex Bolt (M6x20)	4
B09	Holder	1
B10	Knob	1
B11	Flat Washer	2
B12	Screw (M5x12)	2
B13	Handle	1
B14	End Cap	2

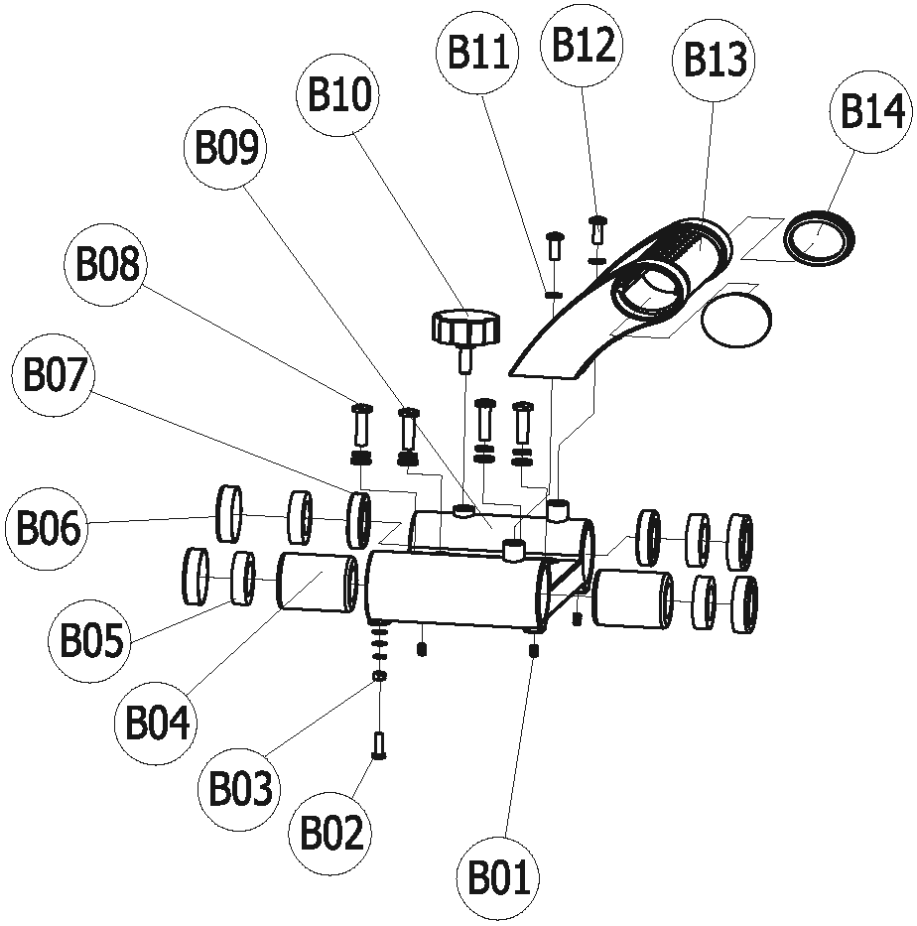

Parts List and Diagram C - Support

Part	Description	Qty.
C01	Steel Support B	1
C02	Connection Shaft	2
C03	Set Screw (M4x15)	7
C04	Flat Washer	2
C05	Knob	2
C06	Socket Wrench	1
C07	Spring Washer	7
C08	Flat Washer	9
C09	Wrench Holder	1
C10	Sliding Bar Support	1
C11	Screw (M6x8)	4
C12	Bevel Scale	1
C13	Flat Washer	2
C14	Spring Washer	2
C15	Hex Nut	2

Part	Description	Qty.
C16	Sliding Bar	2
C17	Tubing Holder	1
C18	Clip	1
C19	Wrench	1
C20	Wrench Holder	1
C21	Pointer	2
C22	Sliding Bar Support	1
C23	Bevel Scale	1
C24	Screw (M6x15)	4
C25	Steel Support	1
C26	Flat Washer	8
C27	Spring Washer	8
C28	Hex Bolt (M8x25)	8
C29	Water Line Scale	1

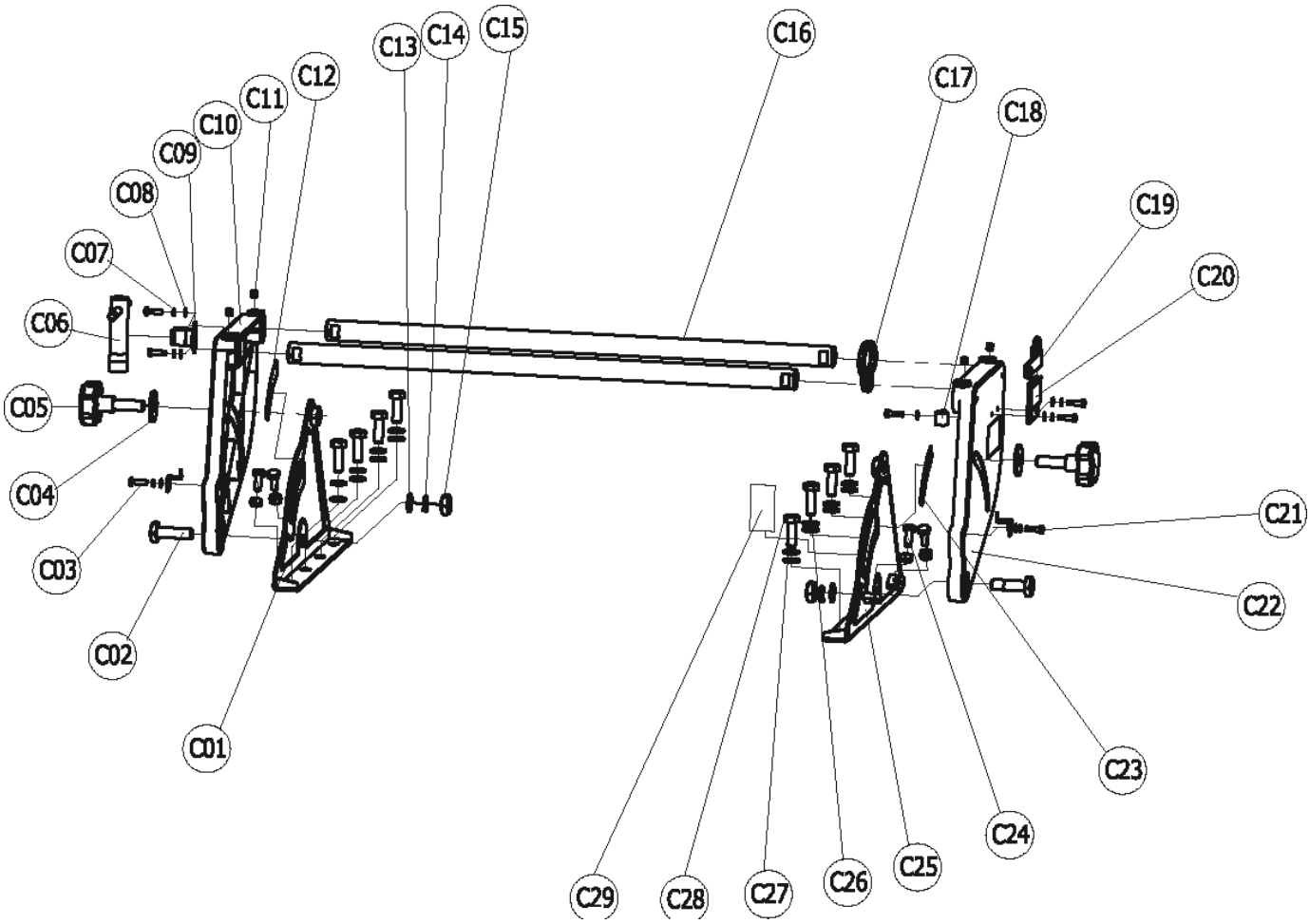

Parts List and Diagram D - Work Table

Part	Description	Qty.
D01	Hex Nut(M6)	16
D02	Spring Washer	20
D03	Flat Washer	20
D04	Stainless Steel Frame	1
D05	Hex Bolt(M6x30)	8
D06	Table End	2
D07	Right Fence Cover 1	1
D08	Scale	1
D09	Right Fence	1
D10	Right Fence Cover 2	1
D11	Left Fence Cover 1	1
D12	Left Fence	1
D13	Scale	1
D14	Left Fence Cover 2	1
D15	Hex Bolt(M6x15)	4
D16	Right Worktable	1

Part	Description	Qty.
D17	Left Worktable	1
D18	Miter Gauge	1
D19	Rivet	1
D20	Knob	1
D21	Guide	1
D22	Knob	1
D23	Clamp Plate	1
D24	Clamp Plate Guide	1
D25	Screw	1
D26	Table End	1
D27	Knob	4
D28	Flat Washer	12
D29	Table Support	4
D30	Hex Bolt(M6x25)	8
D31	Hex Flange Nut(M6)	4

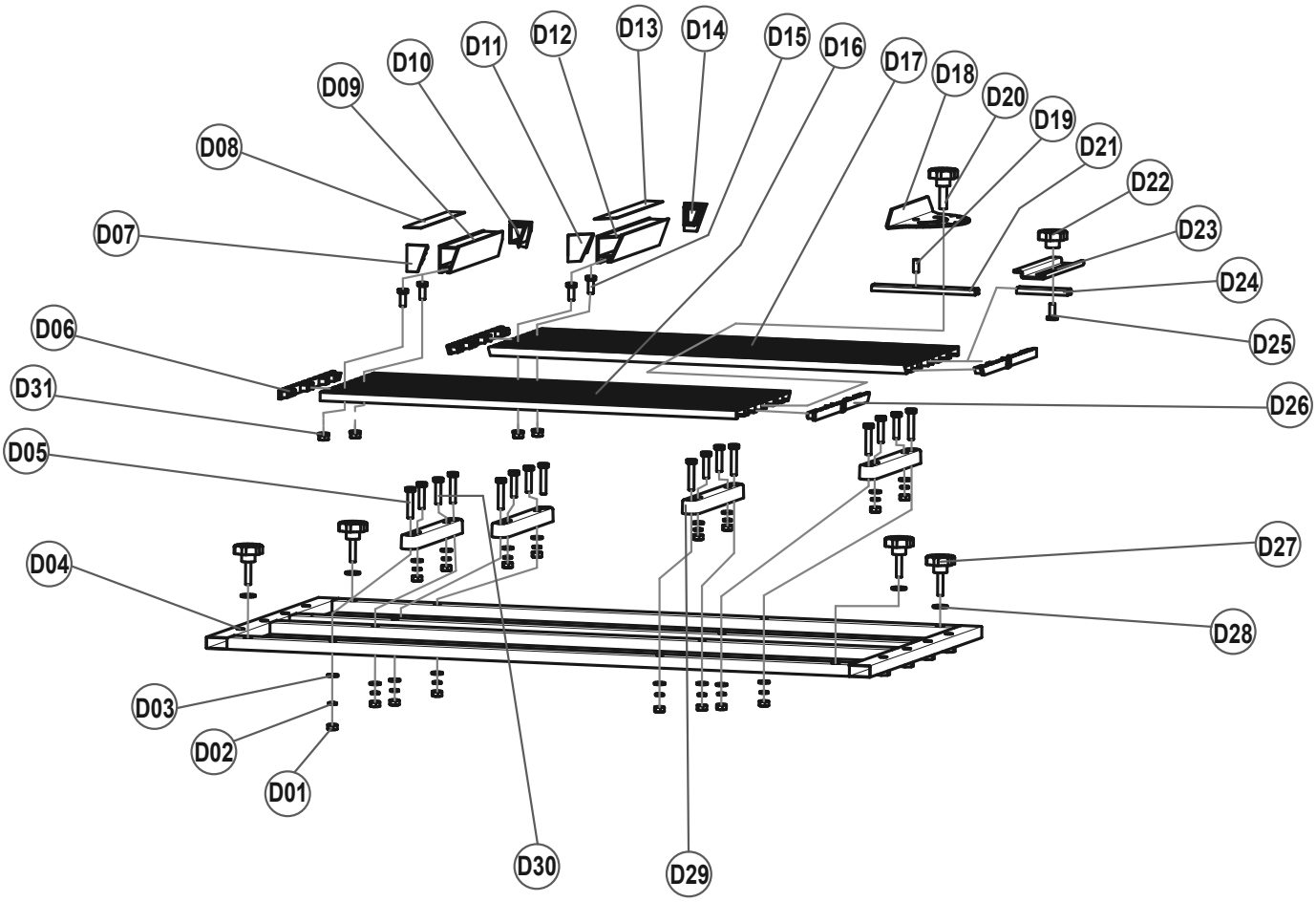

Parts List and Diagram E - Water Tray

Part	Description	Qty.
EO1	Water Tray	1
EO2	O-Ring	1
EO3	Drain Plug	1
EO4	Rubber Cap	1
EO5	Flat Washer	7
EO6	Set Screw	11
EO7	Rubber Feet	7
EO8	Carrying Handle Grip	2

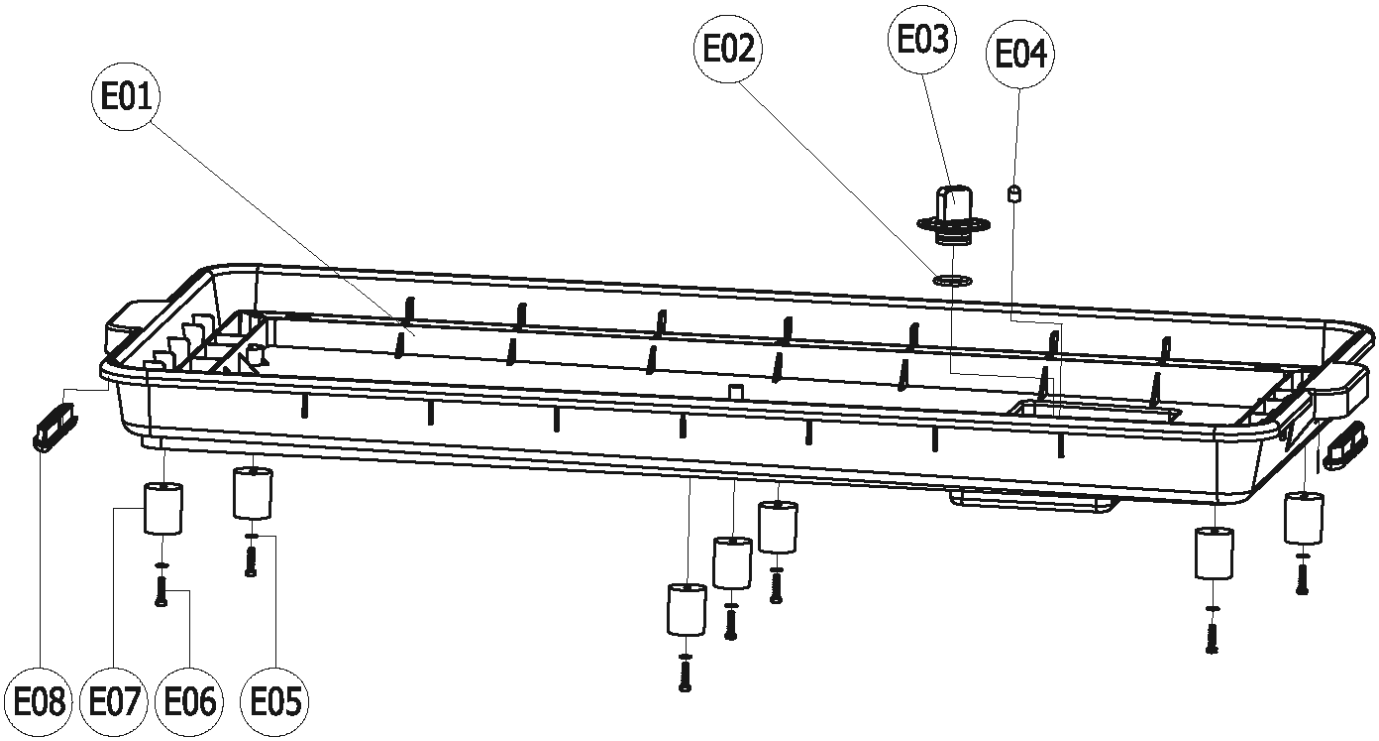

Limited 90 Day Warranty

Harbor Freight Tools Co. makes every effort to assure that its products meet high quality and durability standards, and warrants to the original purchaser that this product is free from defects in materials and workmanship for the period of 90 days from the date of purchase. This warranty does not apply to damage due directly or indirectly, to misuse, abuse, negligence or accidents, repairs or alterations outside our facilities, criminal activity, improper installation, normal wear and tear, or to lack of maintenance. We shall in no event be liable for death, injuries to persons or property, or for incidental, contingent, special or consequential damages arising from the use of our product. Some states do not allow the exclusion or limitation of incidental or consequential damages, so the above limitation of exclusion may not apply to you. THIS WARRANTY IS EXPRESSLY IN LIEU OF ALL OTHER WARRANTIES, EXPRESS OR IMPLIED, INCLUDING THE WARRANTIES OF MERCHANTABILITY AND FITNESS.

To take advantage of this warranty, the product or part must be returned to us with transportation charges prepaid. Proof of purchase date and an explanation of the complaint must accompany the merchandise. If our inspection verifies the defect, we will either repair or replace the product at our election or we may elect to refund the purchase price if we cannot readily and quickly provide you with a replacement. We will return repaired products at our expense, but if we determine there is no defect, or that the defect resulted from causes not within the scope of our warranty, then you must bear the cost of returning the product.

This warranty gives you specific legal rights and you may also have other rights which vary from state to state.

CHICAGO ELECTRIC®
POWER TOOLS

3491 Mission Oaks Blvd. • PO Box 6009 • Camarillo, CA 93011 • 1-888-866-5797