Owner's Manual & Safety Instructions

Save This Manual Keep this manual for the safety warnings and precautions, assembly, operating, inspection, maintenance and cleaning procedures. Write the product's serial number in the back of the manual near the assembly diagram (or month and year of purchase if product has no number). Keep this manual and the receipt in a safe and dry place for future reference.

CHICAGO ELECTRIC POWER TOOLS

ITEM 62459

3-1/2 HORSEPOWER
14" INDUSTRIAL
CUT-OFF SAW

Cut-Off Wheel sold separately.
Visit our website at: http://www.harborfreight.com
Email our technical support at: productsupport@harborfreight.com

REV 14k

When unpacking, make sure that the product is intact and undamaged. If any parts are missing or broken, please call 1-888-866-5797 as soon as possible.

Copyright© 2014 by Harbor Freight Tools®. All rights reserved.
No portion of this manual or any artwork contained herein may be reproduced in any shape or form without the express written consent of Harbor Freight Tools.
Diagrams within this manual may not be drawn proportionally. Due to continuing improvements, actual product may differ slightly from the product described herein.
Tools required for assembly and service may not be included.

⚠WARNING

Read this material before using this product. Failure to do so can result in serious injury. SAVE THIS MANUAL.

Table of Contents

Safety 2
Specifications 7
Setup 7
Operation 8
Maintenance 12
Parts List and Diagram 14
Warranty 16

SAFETY

SETUP

OPERATION

MAINTENANCE

CHICAGO ELECTRIC® POWER TOOLS

WARNING SYMBOLS AND DEFINITIONS	
⚠	This is the safety alert symbol. It is used to alert you to potential personal injury hazards. Obey all safety messages that follow this symbol to avoid possible injury or death.
⚠ DANGER	Indicates a hazardous situation which, if not avoided, will result in death or serious injury.
⚠ WARNING	Indicates a hazardous situation which, if not avoided, could result in death or serious injury.
⚠ CAUTION	Indicates a hazardous situation which, if not avoided, could result in minor or moderate injury.
NOTICE CAUTION	Addresses practices not related to personal injury.

IMPORTANT SAFETY INFORMATION

General Tool Safety Warnings

WARNING Read all safety warnings and instructions.
Failure to follow the warnings and instructions may result in electric shock, fire and/or serious injury.
Save all warnings and instructions for future reference.

1. KEEP GUARDS IN PLACE and in working order.
2. REMOVE ADJUSTING KEYS AND WRENCHES. Form habit of checking to see that keys and adjusting wrenches are removed from tool before turning it on.
3. KEEP WORK AREA CLEAN. Cluttered areas and benches invite accidents.
4. DON'T USE IN DANGEROUS ENVIRONMENT. Don't use power tools in damp or wet locations, or expose them to rain. Keep work area well lighted.
5. KEEP CHILDREN AWAY. All visitors should be kept safe distance from work area.
6. MAKE WORKSHOP KID PROOF with padlocks, master switches, or by removing starter keys.
7. DON'T FORCE TOOL. It will do the job better and safer at the rate for which it was designed.
8. USE RIGHT TOOL. Don't force tool or attachment to do a job for which it was not designed.

TABLE A: RECOMMENDED MINIMUM WIRE GAUGE FOR EXTENSION CORDS (120 VOLT)				
NAMEPLATE AMPERES (at full load)	EXTENSION CORD LENGTH			
	25′	50′	100′	150′
0 – 6	18	16	16	14
6.1 – 10	18	16	14	12
10.1 – 12	16	16	14	12
12.1 – 16	14	12	**Do not use.**	

9. USE PROPER EXTENSION CORD. Make sure your extension cord is in good condition. When using an extension cord, be sure to use one heavy enough to carry the current your product will draw. An undersized cord will cause a drop in line voltage resulting in loss of power and overheating. Table A shows the correct size to use depending on cord length and nameplate ampere rating. If in doubt, use the next heavier gauge. The smaller the gauge number, the heavier the cord.
10. WEAR PROPER APPAREL. Do not wear loose clothing, gloves, neckties, rings, bracelets, or other jewelry which may get caught in moving parts. Nonslip footwear is recommended. Wear protective hair covering to contain long hair.
11. ALWAYS USE SAFETY GLASSES. Also use face or dust mask if cutting operation is dusty. Everyday eyeglasses only have impact resistant lenses, they are NOT safety glasses.
12. SECURE WORK. Use vise to hold work when practical. It's safer than using your hand and it frees both hands to operate tool.
13. DON'T OVERREACH. Keep proper footing and balance at all times.
14. MAINTAIN TOOLS WITH CARE. Keep tools sharp and clean for best and safest performance. Follow instructions for lubricating and changing accessories.
15. DISCONNECT TOOLS before servicing; when changing accessories, such as blades, bits, cutters, and the like.
16. REDUCE THE RISK OF UNINTENTIONAL STARTING. Make sure switch is in off position before plugging in.
17. USE RECOMMENDED ACCESSORIES. Consult the owner's manual for recommended accessories. The use of improper accessories may cause risk of injury to persons.
18. NEVER STAND ON TOOL. Serious injury could occur if the tool is tipped or if the cutting tool is unintentionally contacted.
19. CHECK DAMAGED PARTS. Before further use of the tool, a guard or other part that is damaged should be carefully checked to determine that it will operate properly and perform its intended function – check for alignment of moving parts, binding of moving parts, breakage of parts, mounting, and any other conditions that may affect its operation. A guard or other part that is damaged should be properly repaired or replaced.
20. NEVER LEAVE TOOL RUNNING UNATTENDED. TURN POWER OFF. Don't leave tool until it comes to a complete stop.

Grounding Instructions

⚠WARNING

TO PREVENT ELECTRIC SHOCK AND DEATH FROM INCORRECT GROUNDING WIRE CONNECTION
READ AND FOLLOW THESE INSTRUCTIONS:

110-120 VAC Grounded Tools: Tools with Three Prong Plugs

1. In the event of a malfunction or breakdown, grounding provides a path of least resistance for electric current to reduce the risk of electric shock. This tool is equipped with an electric cord having an equipment-grounding conductor and a grounding plug. The plug must be plugged into a matching outlet that is properly installed and grounded in accordance with all local codes and ordinances.
2. Do not modify the plug provided – if it will not fit the outlet, have the proper outlet installed by a qualified electrician.
3. Improper connection of the equipment-grounding conductor can result in a risk of electric shock. The conductor with insulation having an outer surface that is green with or without yellow stripes is the equipment-grounding conductor. If repair or replacement of the electric cord or plug is necessary, do not connect the equipment-grounding conductor to a live terminal.
4. Check with a qualified electrician or service personnel if the grounding instructions are not completely understood, or if in doubt as to whether the tool is properly grounded.
5. Use only 3-wire extension cords that have 3-prong grounding plugs and 3-pole receptacles that accept the tool's plug.
6. Repair or replace damaged or worn cord immediately.

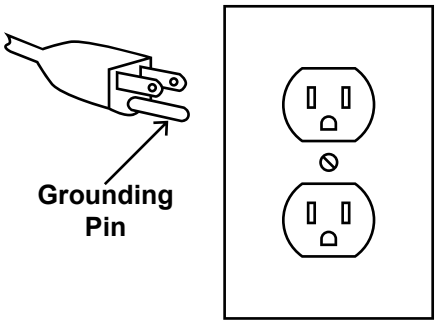

125 VAC 3-Prong Plug and Outlet
(for up to 125 VAC and up to 15)

7. This tool is intended for use on a circuit that has an outlet that looks like the one illustrated above in **125 VAC 3-Prong Plug and Outlet**. The tool has a grounding plug that looks like the plug illustrated above in **125 VAC 3-Prong Plug and Outlet**.
8. The outlet must be properly installed and grounded in accordance with all codes and ordinances.
9. Do not use an adapter to connect this tool to a different outlet.

Cut-Off Saw (Grinder) Safety Warnings

For Your Own Safety Read Instruction Manual Before Operating Cut-Off Saw

1. Wear eye protection.
2. Use grinding wheel suitable for speed of Cut-Off Saw.
3. Always use guards and eye shields.
4. Replace cracked wheel immediately.
5. Do not overtighten Arbor Bolt.
6. Use only flanges furnished with the Cut-Off Saw.
7. Frequently clean grinding dust from beneath Cut-Off Saw.
8. Wear a full face shield over ANSI-approved safety goggles during use.
9. Do not grind with side of wheel unless wheel is specifically designed for that type of grinding.
10. **DO NOT OPERATE WITH ANY GUARD DISABLED, DAMAGED, OR REMOVED. Moving guards must move freely and close instantly.**
11. The Swing Guard should be retracted manually only for special cuts such as “Pocket Cuts” and “Compound Cuts.” Raise the Swing Guard only enough to begin the cut. As soon as the cut-off wheel enters the material, the Swing Guard must be released. For all other sawing, the Swing Guard should be allowed to operate automatically.
12. The Saw is not to be used for any cutting in the locked down position. The Saw should be locked down only for carrying and storage.
13. Only use cut-off wheels with a 14″ (355mm) diameter, 1″ arbor hole, and rated at a minimum of 3,500 RPM. Cut-off wheels that do not match the mounting hardware of the Saw or that are rated at less than the Saw’s maximum RPM may fly off the Saw or may run eccentrically, causing loss of control.
14. Do not use the cut-off wheel (sold separately) to cut aluminum, copper, brass, or other non-ferrous metals. The cut-off wheel is designed to cut only ferrous (iron containing) metals such as steel alloys and cast iron. If using other cut-off wheels, only use them on materials that the manufacturer recommends.
15. The use of accessories or attachments not recommended by the manufacturer may result in a risk of injury to persons.
16. When servicing use only identical replacement parts.
17. Only use safety equipment that has been approved by an appropriate standards agency. Unapproved safety equipment may not provide adequate protection. Eye protection must be ANSI-approved and breathing protection must be NIOSH-approved for the specific hazards in the work area.
18. Do not depress the Spindle Lock when starting or during operation.
19. Industrial applications must follow OSHA guidelines.
20. Stay alert, watch what you are doing and use common sense when operating a power tool. Do not use a power tool while you are tired or under the influence of drugs, alcohol or medication. A moment of inattention while operating power tools may result in serious personal injury.
21. Maintain labels and nameplates on the tool. These carry important safety information. If unreadable or missing, contact Harbor Freight Tools for a replacement.
22. Avoid unintentional starting. Prepare to begin work before turning on the tool.
23. People with pacemakers should consult their physician(s) before use. Electromagnetic fields in close proximity to heart pacemaker could cause pacemaker interference or pacemaker failure.
24. WARNING: Some dust created by power sanding, sawing, grinding, drilling, and other construction activities, contains chemicals known to the State of California to cause cancer and birth defects or other reproductive harm. Some examples of these chemicals are:
    - Lead from lead-based paints
    - Crystalline silica from bricks and cement or other masonry products
    - Arsenic and chromium from chemically treated lumber

    Your risk from these exposures varies, depending on how often you do this type of work. To reduce your exposure to these chemicals: work in a well ventilated area, and work with approved safety equipment, such as those dust masks that are specially designed to filter out microscopic particles. (California Health & Safety Code § 25249.5, *et seq.*)
25. WARNING: The cord of this product contains lead and/or di (2-ethylhexyl) phthalate (DEHP), chemicals known to the State of California to cause cancer, and birth defects or other reproductive harm. Wash hands after handling. (California Health & Safety Code § 25249.5, *et seq.*)
26. The warnings, precautions, and instructions discussed in this instruction manual cannot cover all possible conditions and situations that may occur. It must be understood by the operator that common sense and caution are factors which cannot be built into this product, but must be supplied by the operator.

Vibration Safety

This tool vibrates during use. Repeated or long-term exposure to vibration may cause temporary or permanent physical injury, particularly to the hands, arms and shoulders. To reduce the risk of vibration-related injury:

1. Anyone using vibrating tools regularly or for an extended period should first be examined by a doctor and then have regular medical check-ups to ensure medical problems are not being caused or worsened from use. Pregnant women or people who have impaired blood circulation to the hand, past hand injuries, nervous system disorders, diabetes, or Raynaud's Disease should not use this tool. If you feel any medical or physical symptoms related to vibration (such as tingling, numbness, and white or blue fingers), seek medical advice as soon as possible.
2. Do not smoke during use. Nicotine reduces the blood supply to the hands and fingers, increasing the risk of vibration-related injury.
3. Use tools with the lowest vibration when there is a choice between different processes.
4. Include vibration-free periods each day of work.
5. Grip tool as lightly as possible (while still keeping safe control of it). Let the tool do the work.
6. To reduce vibration, maintain the tool as explained in this manual. If any abnormal vibration occurs, stop use immediately.

SAVE THESE INSTRUCTIONS.

CHICAGO ELECTRIC® POWER TOOLS

Specifications

Electrical Input	120VAC / 60Hz / 15A
Motor No Load Speed	3,500 RPM
Max. Accessory Diameter	14″ (355mm)
Recommended Cut-Off Wheel Types	14″ Cut-Off Wheel for Metal (Item 44814, sold separately)
	14″ Cut-Off Wheel for Masonry (Item 44815, sold separately)
Cutting Capacity	5″
Quick Release Vise Capacities	7″ (1st Setting), 9-1/2″ (2nd Setting)
Arbor Size	1″

Intertek
3151837

Setup - Before Use

Functions

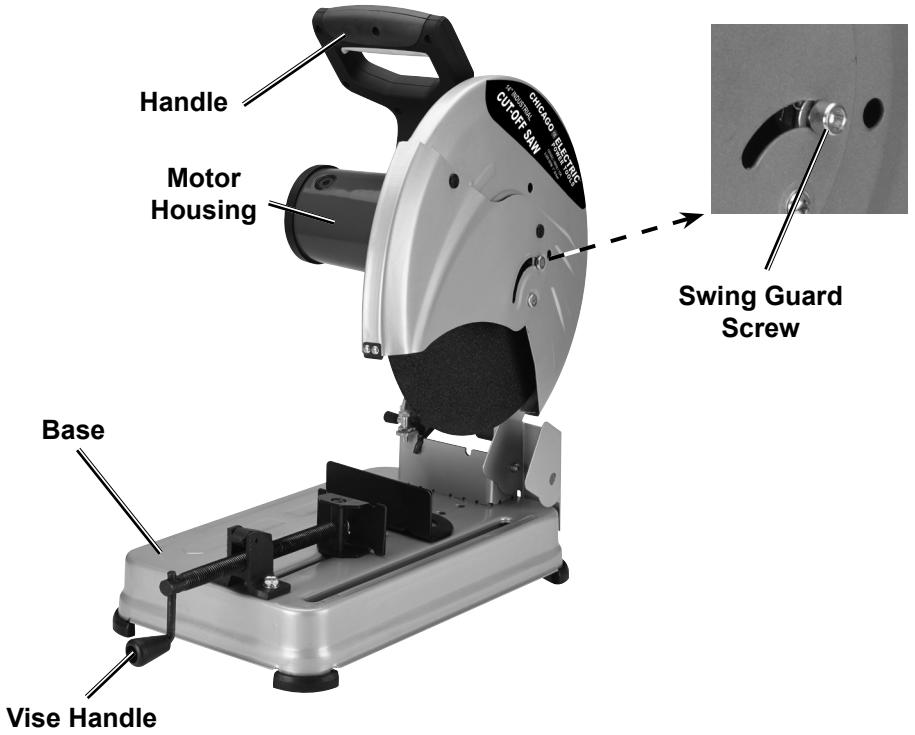

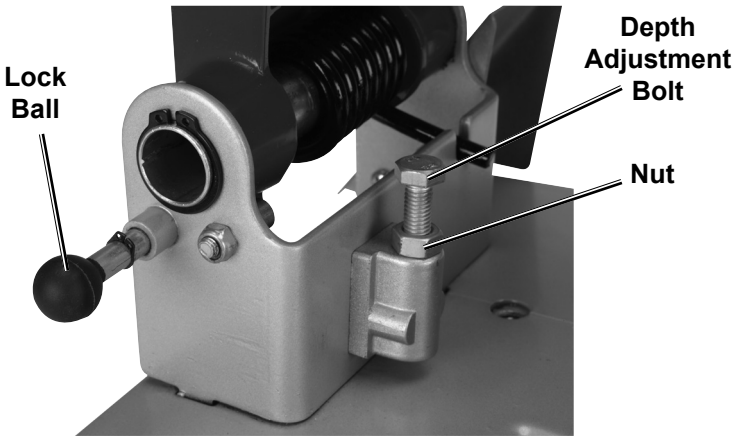

Read the ENTIRE IMPORTANT SAFETY INFORMATION section at the beginning of this manual including all text under subheadings therein before set up or use of this product.

Tool Set Up

⚠WARNING

TO PREVENT SERIOUS INJURY FROM ACCIDENTAL OPERATION:
Release the Trigger, unplug the tool from its electrical outlet before performing any inspection, maintenance, or cleaning procedures.

TO PREVENT SERIOUS INJURY: DO NOT OPERATE WITH ANY GUARD DISABLED, DAMAGED, OR REMOVED. Moving guards must move freely and close instantly.

Installing a Cut-Off (Grinding) Wheel

1. The cut-off wheel (sold separately) MUST be:
   - rated to at least 3,500 RPM.
   - no larger than 14″ (355mm) in diameter.
   - fitted with a 1″ round arbor hole.
   - suitable for edge grinding, not surface grinding.
   - dry and clean.
   - proven undamaged by inspection and by the ring-test explained below.
2. Raise the Saw if it is locked down by pushing down on the Handle and pulling out the Lock Cap (74).
3. Open the Swing Guard (52) and tighten the Swing Guard Screw (53) to secure it while working on the cut-off wheel.
4. Push the Spindle Lock (58) towards the Fixed Guard (50) as shown in **Figure A**. Rotate the cut-off wheel until the Spindle Lock slides into place.

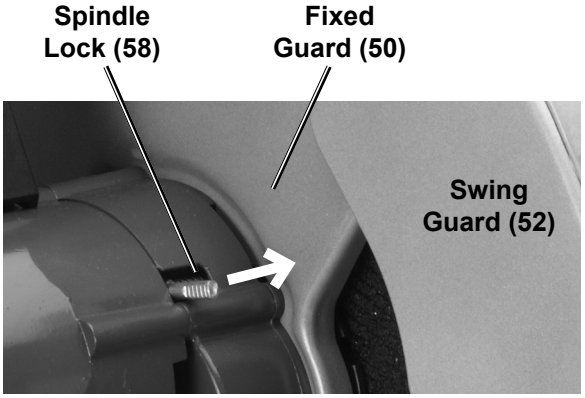

Figure A: Spindle Lock

5. While continuing to hold down the Spindle Lock, loosen the Arbor Bolt (1).
6. Remove the Arbor Bolt, the Flange Washer (2), the Outer Flange (3), and the cut-off wheel. See **Figure B.**

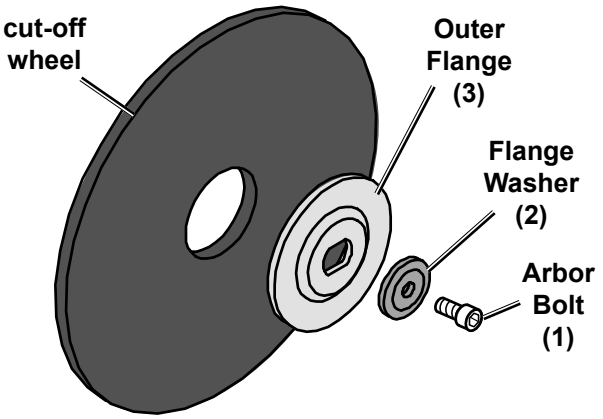

Figure B: Removing Cut-Off Wheel

7. Closely inspect the new wheel before mounting. Perform a ring-test on the wheel as follows:
   a. Suspend wheel using a dowel or finger through the arbor hole.
   b. Tap the flat side of the wheel with a light non-metallic object, such as a screwdriver handle, at a point 45° from the vertical center line on each side of the wheel and 1 - 2 inches from the edge of the wheel (see **Figure C**).

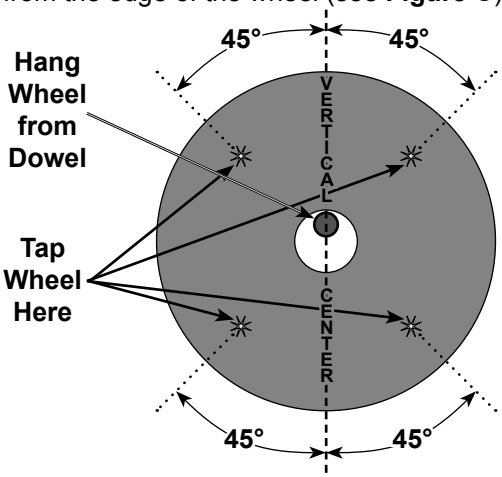

Figure C: Cut-Off Wheel Ring-Test

c. Rotate the wheel 90° and repeat the test until the entire wheel has been checked.

d. An undamaged wheel will give a clear tone. If cracked, there will be a dead sound and not a clear ring.

8. Replace with the new cut-off wheel, and reassemble the parts shown in **Figure B**. The concave side of the Outer Flange must face the Wheel. See **Figure D**.

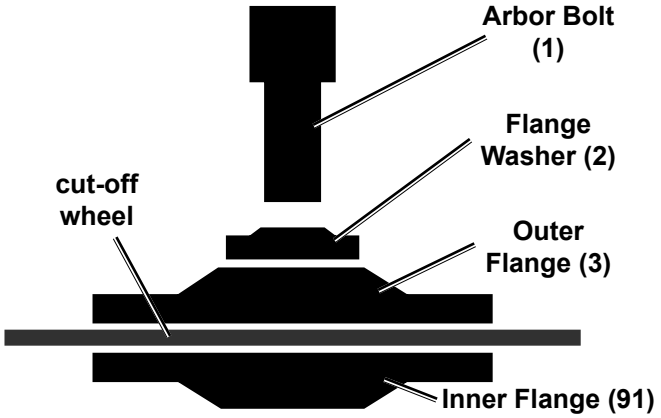

Figure D: Cut-Off Wheel Hardware

9. For wheels with paper gaskets (blotters) or metal gaskets: Slip the grinding wheel onto the Spindle with the gasket first. The gasket should be centered on the grinding wheel and the wheel and gasket should rest flat against the Inner Flange (91).
⚠WARNING: To prevent serious injury, gaskets must be used for all grinding wheels they are provided with. Gaskets help prevent grinding wheel damage and wheel slippage, causes of wheel failure.

10. While holding the Spindle Lock, tighten the Arbor Bolt.
⚠WARNING: To prevent serious injury, do not overtighten the Arbor Bolt. Overtightening can damage the wheel, causing wheel failure.

11. **LOOSEN THE SWING GUARD SCREW and make sure that the Swing Guard moves freely back into place before operation.**

12. **WARNING!** Adjust the Cutting Depth whenever replacing a worn wheel. See following section.

Depth Adjustment

1. Loosen the Nut (8) on the Depth Adjustment Bolt (70) shown in **Figure E**.

2. Turn the Depth Adjustment Bolt (70) to change the depth so that the cut-off wheel will not contact the base at any time during cutting.

3. After adjustment, tighten the Nut (8) down against the bracket to lock the adjustment in place.

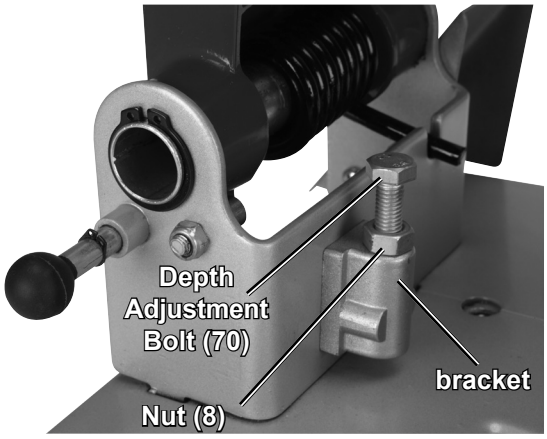

Figure E: Depth Adjustment

CHICAGO ELECTRIC® POWER TOOLS

Work Piece and Work Area Set Up

1. Designate a work area that is clean and well-lit. The work area must not allow access by children or pets to prevent distraction and injury.
2. Route the power cord along a safe route to reach the work area without creating a tripping hazard or exposing the power cord to possible damage. The power cord must reach the work area with enough extra length to allow free movement while working.
3. There must not be objects, such as utility lines, nearby that will present a hazard while working.

Setting Up an Angle Cut

1. To cut at various angles (up to 45º), adjust the Angle Scale (80) by loosening the two Bolts (77) as shown in **Figure F**.
2. Adjust the Angle Scale to the desired setting and then tighten both Bolts.
3. To reposition the Angle Scale for a wider workpiece, remove both of the Bolts, and reattach the Angle Scale at the upper two screw holes. See **Figure F**.

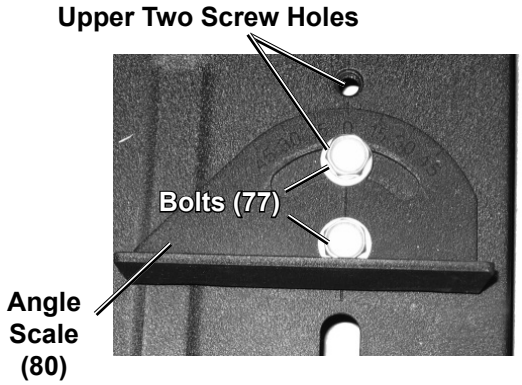

Figure F: Angle Scale

Using the Vise

1. After setting the cutting angle, secure loose work pieces using the vise to prevent movement while working:
   a. Put the Quick Release (82) in the position shown in **Figure G** and push the Vise Handle (13) until the vise jaw is up against the workpiece.
   b. Tighten the Vise Handle to secure the workpiece.

   Note: To cut the workpiece at an angle, see *Setting Up an Angle Cut* on page 10
2. To release the workpiece, loosen the Vise Handle a few turns, lift up the Quick Release and pull the Vise Handle open.

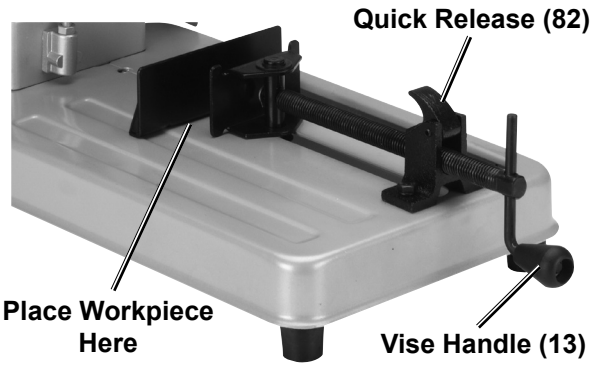

Figure G: Vise Components

General Operating Instructions

⚠WARNING

TO PREVENT SERIOUS INJURY:
DO NOT OPERATE WITH ANY GUARD DISABLED, DAMAGED, OR REMOVED.
Moving guards must move freely and close instantly.
Swing Guard Screw (53) MUST be loose before operation.

1. Using the vise, secure your workpiece and, if necessary, adjust the angle of the cut.
2. Raise the Saw by pushing down on the Handle and pulling out the Lock Ball.
3. Plug the Power Cord into the nearest 120 VAC, grounded, electrical outlet.
4. Squeeze the Trigger to start the Saw. Allow the cut-off wheel to attain full speed.
5. With one hand on the Handle and the other hand clear, slowly bring the cut-off wheel down onto the workpiece, letting the Saw do the work. Do not apply excessive force.
6. If the cut-off wheel does not cut all the way through the workpiece:
   a. Raise the Saw and release the Trigger.
   b. Unplug the unit.
   c. Wait until the cut-off wheel comes to a full stop.
   d. Remove the workpiece.
   e. Set the depth adjustment to a deeper setting (see *Depth Adjustment* on page 9).
   f. After adjusting the depth, bring the Saw all the way down to make sure the cut-off wheel doesn't contact the Base.
   g. If it does contact any part of the Base, re-adjust the depth so it doesn't.
   h. Repeat the cutting process starting with step 1 above.
7. Once the cut is completed, turn off the Saw by releasing the Trigger and unplug the unit. Do not attempt to remove the workpiece until the cut-off wheel has stopped moving.
8. To prevent accidents, after use turn off the tool, disconnect its power supply, and lock it down by pushing it down as far as it will go and then pushing in the Lock Ball.
9. Clean, then store the tool indoors out of children's reach.

Maintenance and Servicing

Procedures not specifically explained in this manual must be performed only by a qualified technician.

⚠WARNING

TO PREVENT SERIOUS INJURY FROM ACCIDENTAL OPERATION:
Release the Trigger, unplug the tool from its electrical outlet and allow the wheel to cool completely before performing any inspection, maintenance, or cleaning procedures.

TO PREVENT SERIOUS INJURY FROM TOOL FAILURE:
Do not use damaged equipment. If abnormal noise or vibration occurs, have the problem corrected before further use.

Cleaning, Maintenance, and Lubrication

1. **BEFORE EACH USE,** inspect the general condition of the tool. Check for:
   - loose hardware,
   - misalignment or binding of moving parts,
   - cracked or broken parts,
   - damaged electrical wiring, and
   - any other condition that may affect its safe operation.
2. **AFTER USE,** wipe external surfaces of the tool with clean cloth.
3. Periodically, wear ANSI-approved safety goggles and NIOSH-approved breathing protection and blow dust and grit out of the motor vents using dry compressed air.
4. **⚠WARNING! If the supply cord of this power tool is damaged, it must be replaced only by a qualified service technician.**

Accessory Storage and Handling

1. Handle accessories carefully to prevent dropping or bumping. Do not use wheels that have been dropped or bumped.
2. Store accessories in shelves, racks, boxes, or drawers. Keep storage area dry and above freezing. Any grinding or cut-off wheels exposed to humidity or freezing temperatures must not be used.

Troubleshooting

Problem	Possible Causes	Likely Solutions
Tool will not start.	1. Cord not connected. 2. No power at outlet. 3. Tool's thermal reset breaker tripped (if equipped). 4. Internal damage or wear. (Carbon brushes or switch, for example.)	1. Check that cord is plugged in. 2. Check power at outlet. If outlet is unpowered, turn off tool and check circuit breaker. If breaker is tripped, make sure circuit is right capacity for tool and circuit has no other loads. 3. Turn off tool and allow to cool. Press reset button on tool. 4. Have technician service tool.
Tool operates slowly.	Extension cord too long or wire size too small.	Eliminate use of extension cord. If an extension cord is needed, use shorter/heavier gauge cord. See *Extension Cords* in *GROUNDING* section.
Performance decreases over time.	1. Wheel worn or dull. 2. Carbon brushes worn or damaged.	1. Replace wheel. 2. Have qualified technician replace brushes.
Excessive noise or rattling.	Internal damage or wear. (Carbon brushes or bearings, for example.)	Have technician service tool.
Overheating.	1. Forcing machine to work too fast. 2. Wheel worn or dull. 3. Blocked motor housing vents. 4. Motor being strained by long or small diameter extension cord.	1. Allow machine to work at its own rate. 2. Replace wheel. 3. Wear ANSI-approved safety goggles and NIOSH-approved dust mask/respirator while blowing dust out of motor using compressed air. 4. Eliminate use of extension cord. If an extension cord is needed, use one with the proper diameter for its length and load. See *Extension Cords* in *GROUNDING* section.

Follow all safety precautions whenever diagnosing or servicing the tool.
Disconnect power supply before service.

PLEASE READ THE FOLLOWING CAREFULLY

THE MANUFACTURER AND/OR DISTRIBUTOR HAS PROVIDED THE PARTS LIST AND ASSEMBLY DIAGRAM IN THIS MANUAL AS A REFERENCE TOOL ONLY. NEITHER THE MANUFACTURER OR DISTRIBUTOR MAKES ANY REPRESENTATION OR WARRANTY OF ANY KIND TO THE BUYER THAT HE OR SHE IS QUALIFIED TO MAKE ANY REPAIRS TO THE PRODUCT, OR THAT HE OR SHE IS QUALIFIED TO REPLACE ANY PARTS OF THE PRODUCT. IN FACT, THE MANUFACTURER AND/OR DISTRIBUTOR EXPRESSLY STATES THAT ALL REPAIRS AND PARTS REPLACEMENTS SHOULD BE UNDERTAKEN BY CERTIFIED AND LICENSED TECHNICIANS, AND NOT BY THE BUYER. THE BUYER ASSUMES ALL RISK AND LIABILITY ARISING OUT OF HIS OR HER REPAIRS TO THE ORIGINAL PRODUCT OR REPLACEMENT PARTS THERETO, OR ARISING OUT OF HIS OR HER INSTALLATION OF REPLACEMENT PARTS THERETO.

Parts List

Part	Description	Qty
1	Arbor Bolt	1
2	Flange Washer	1
3	Outer Flange	1
4	Cutting Wheel (sold separately)	-
5	Wrench	1
6	Rubber Foot	4
7	Base	1
8	Nut	4
9	Vice Stand	1
10	Washer	5
11	Standard Spring Washer	3
12	Hexagon Bolt	2
13	Vise Handle	1
13.1	Screw	1
13.2	Rocking Bar	1
13.3	Cap Of Rocking Bar	1
13.4	Spring Washer	1
14	Hatch Pin	2
15	Small Clamping Plate	1
16	Vice Column Pin	1
17	Cap Of Brush Holder	2
18	Carbon Brush	2
19	Brush Holder	2
20	Rear Cover	1
21	Cross Screw	2
22	Cross Screw	2
23	Cross Screw	1
24	Standard Spring Washer	1
25	Housing	1
26	Stator	1
27	Bearing	1

Part	Description	Qty
28	Rotor	1
29	Standard Spring Washer	6
30	Cross Screw	2
31	Switch	1
32	Trigger	1
33	Cross Screw	2
34	Up-Handle	1
35	Cross Screw	2
36	Cross Screw	1
37	Cross Screw	2
38	Left Lifting Handle	1
39	Cross Screw	2
40	Cord Anchorage	1
41	Cord Armor	1
42	Cable Wire	1
43	Right Lifting Handle	1
44	Hexagon Nut	3
45	Down-Handle	1
46	Cross Screw	6
47	Anti-Wind Ring	1
48	Bearing	1
49	Gear Box	1
50	Fixed Guard	1
51	Cross Screw	4
52	Swing Guard	1
53	Swing Guard Screw	2
54	Spindle	1
55	Semicircle Key	1
56	Bearing	1
57	Spring of Lock Pin	1
58	Spindle Lock	1
59	Bearing Holder	1
60	Gear	1

Part	Description	Qty
61	Spring Washer	1
62	Bearing	1
63	Circumgyrate Pin	1
64	Cross Screw	1
65	Washer	1
66	Standard Spring Washer	1
67	Dust Board	1
68	Big Spring	1
69	Hexagon Nut	1
70	Depth Adjustment Bolt	1
71	Pipe	1
72	Height Limited Pin	1
73	Type “O” Ring	1
74	Lock Cap	1
75	Hexagon Nut	1
76	Hexagon Screw	
77	Bolt	2
78	Standard Spring Washer	2
79	Washer	2
80	Angle Scale	1
81	Springiness Column Pin	1
82	Quick Release	1
83	Fastener	3
84	Hexagon Nut	2
85	Cross Screw	3
86	Cover Protecter	1
87	Cross Screw	2
88	Cover Of Column Pin	1
89	Washer	2
90	Cross Screw	2
91	Inner Flange	1

Record Product’s Serial Number Here:_____

Note: If product has no serial number, record month and year of purchase instead.

Note: Some parts are listed and shown for illustration purposes only, and are not available individually as replacement parts.

Assembly Diagram

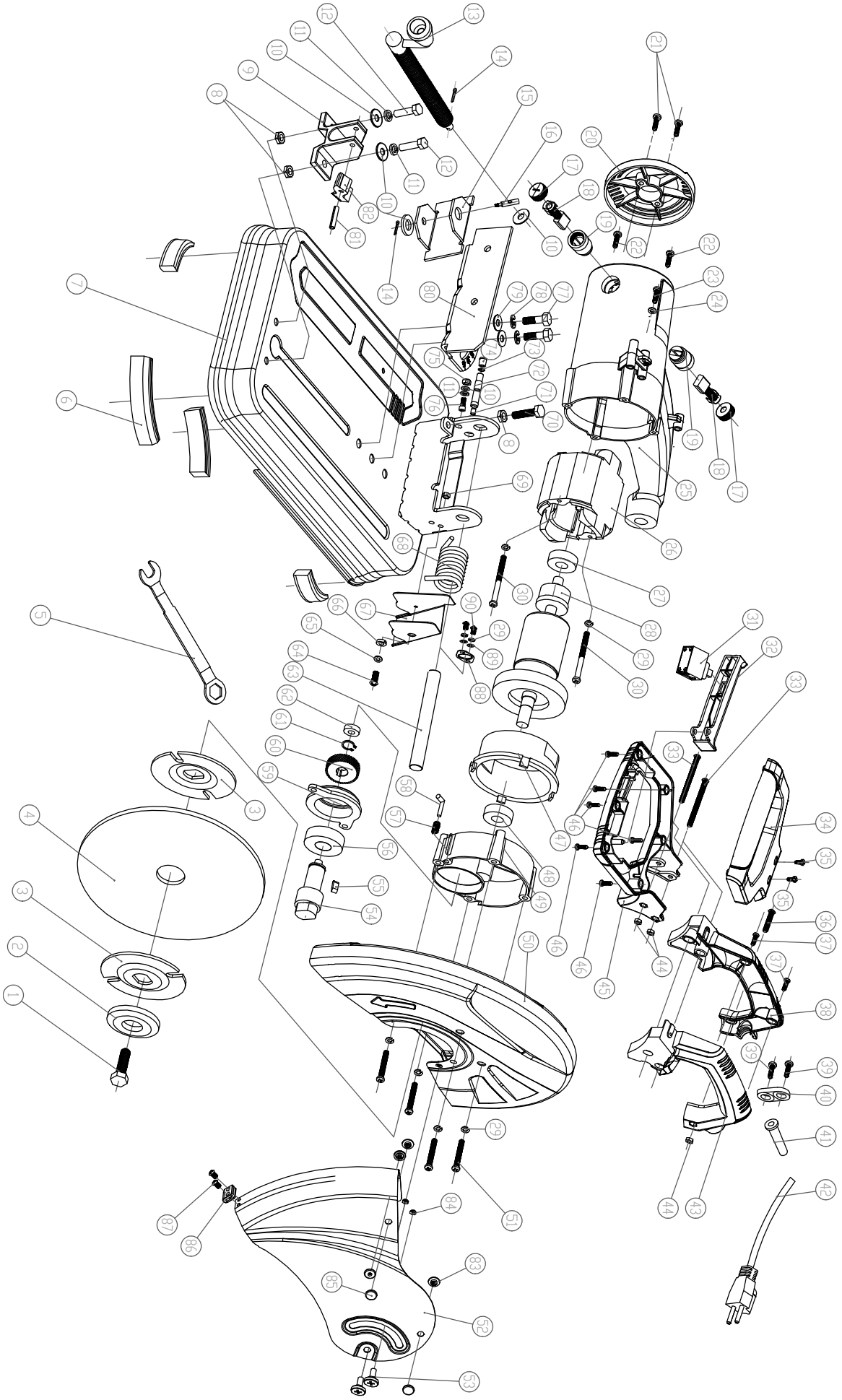

Limited 90 Day Warranty

Harbor Freight Tools Co. makes every effort to assure that its products meet high quality and durability standards, and warrants to the original purchaser that this product is free from defects in materials and workmanship for the period of 90 days from the date of purchase. This warranty does not apply to damage due directly or indirectly, to misuse, abuse, negligence or accidents, repairs or alterations outside our facilities, criminal activity, improper installation, normal wear and tear, or to lack of maintenance. We shall in no event be liable for death, injuries to persons or property, or for incidental, contingent, special or consequential damages arising from the use of our product. Some states do not allow the exclusion or limitation of incidental or consequential damages, so the above limitation of exclusion may not apply to you. THIS WARRANTY IS EXPRESSLY IN LIEU OF ALL OTHER WARRANTIES, EXPRESS OR IMPLIED, INCLUDING THE WARRANTIES OF MERCHANTABILITY AND FITNESS.

To take advantage of this warranty, the product or part must be returned to us with transportation charges prepaid. Proof of purchase date and an explanation of the complaint must accompany the merchandise. If our inspection verifies the defect, we will either repair or replace the product at our election or we may elect to refund the purchase price if we cannot readily and quickly provide you with a replacement. We will return repaired products at our expense, but if we determine there is no defect, or that the defect resulted from causes not within the scope of our warranty, then you must bear the cost of returning the product.

This warranty gives you specific legal rights and you may also have other rights which vary from state to state.

CHICAGO ELECTRIC®
POWER TOOLS

3491 Mission Oaks Blvd. • PO Box 6009 • Camarillo, CA 93011 • 1-888-866-5797