Owner's Manual & Safety Instructions

Save This Manual Keep this manual for the safety warnings and precautions, assembly, operating, inspection, maintenance and cleaning procedures. Write the product's serial number in the back of the manual near the assembly diagram (or month and year of purchase if product has no number). Keep this manual and the receipt in a safe and dry place for future reference. 17I

Pierce™

21° FRAMING NAILER

PRC-21

Visit our website at: http://www.harborfreight.com
Email our technical support at: productsupport@harborfreight.com

64253

When unpacking, make sure that the product is intact and undamaged. If any parts are missing or broken, please call 1-888-866-5797 as soon as possible.

Copyright© 2017 by Harbor Freight Tools®. All rights reserved.
No portion of this manual or any artwork contained herein may be reproduced in any shape or form without the express written consent of Harbor Freight Tools.
Diagrams within this manual may not be drawn proportionally. Due to continuing improvements, actual product may differ slightly from the product described herein. Tools required for assembly and service may not be included.

⚠WARNING

Read this material before using this product. Failure to do so can result in serious injury. SAVE THIS MANUAL.

Table of Contents

Safety 2
Specifications 7
Setup 8
Operation 11
Maintenance 15
Parts List and Diagram 18
Warranty 20

SAFETY

SETUP

OPERATION

MAINTENANCE

WARNING SYMBOLS AND DEFINITIONS	
⚠	This is the safety alert symbol. It is used to alert you to potential personal injury hazards. Obey all safety messages that follow this symbol to avoid possible injury or death.
⚠ DANGER	Indicates a hazardous situation which, if not avoided, will result in death or serious injury.
⚠ WARNING	Indicates a hazardous situation which, if not avoided, could result in death or serious injury.
⚠ CAUTION	Indicates a hazardous situation which, if not avoided, could result in minor or moderate injury.
NOTICE CAUTION	Addresses practices not related to personal injury.

Symbol	Property or statement
PSI	Pounds per square inch of pressure
CFM	Cubic Feet per Minute flow
SCFM	Cubic Feet per Minute flow at standard conditions
NPT	National pipe thread, tapered
NPS	National pipe thread, straight
	WARNING marking concerning Risk of Eye Injury. Wear ANSI-approved safety goggles with side shields.

Symbol	Property or statement
	Warning marking concerning Risk of Puncture Injury. Wear heavy-duty work gloves.
	Read the manual before set-up and/or use.
	WARNING marking concerning Risk of Hearing Loss. Wear hearing protection.
	WARNING marking concerning Risk of Respiratory Injury. Wear NIOSH-approved dust mask/respirator.
	WARNING marking concerning Risk of Explosion.

Table A: Symbol Definitions

IMPORTANT SAFETY INSTRUCTIONS

INSTRUCTIONS PERTAINING TO A RISK OF FIRE, ELECTRIC SHOCK, OR INJURY TO PERSONS

WARNING – When using tools, basic precautions should always be followed, including the following:

General

To reduce the risks of electric shock, fire, and injury to persons, read all the instructions before using the tool.

Work Area

a. **Keep the work area clean and well lighted.** Cluttered benches and dark areas increase the risks of electric shock, fire, and injury to persons.

b. **Do not operate the tool in explosive atmospheres, such as in the presence of flammable liquids, gases, or dust.** The tool is able to create sparks resulting in the ignition of the dust or fumes.

c. ***Keep bystanders, children, and visitors away while operating the tool.*** Distractions are able to result in the loss of control of the tool.

Personal Safety

a. ***Stay alert. Watch what you are doing and use common sense when operating the tool. Do not use the tool while tired or under the influence of drugs, alcohol, or medication.*** A moment of inattention while operating the tool increases the risk of injury to persons.

b. **Dress properly. Do not wear loose clothing or jewelry. Contain long hair. Keep hair, clothing, and gloves away from moving parts.** Loose clothes, jewelry, or long hair increases the risk of injury to persons as a result of being caught in moving parts.

c. **Avoid unintentional starting. Be sure the Trigger is released before connecting to the air supply.** Do not carry the tool with your finger on the Trigger or connect the tool to the air supply with the Trigger pressed.

d. **Do not overreach. Keep proper footing and balance at all times.** Proper footing and balance enables better control of the tool in unexpected situations.

e. **Use safety equipment.** A dust mask, non-skid safety shoes and a hard hat must be used for the applicable conditions. Wear heavy-duty work gloves during use.

f. **Always wear eye protection.** Wear ANSI-approved safety goggles with side shields.

g. **Always wear hearing protection when using the tool.** Prolonged exposure to high intensity noise is able to cause hearing loss.

h. **Do not attach the hose or tool to your body.** Attach the hose to the structure to reduce the risk of loss of balance if the hose shifts.

i. **Always assume that the tool contains fasteners.** Do not point the tool toward yourself or anyone whether it contains fasteners or not.

j. **WARNING – Do not drive fastener on top of another fastener.** This is able to cause the fastener to be deflected and hit someone, or cause the tool to react and result in a risk of injury to persons.

k. **WARNING – Remove finger from the Trigger when not driving fasteners.** Never carry the tool with finger on Trigger, the tool is able to discharge a fastener.

Tool Use and Care

a. ***Use clamps or another practical way to secure and support the workpiece to a stable platform.*** Holding the work by hand or against the body is unstable and can lead to loss of control.

b. **Do not force the tool.** Use the correct tool for the application. The correct tool will do the job better and safer at the rate for which the tool is designed.

c. **Do not use the tool if the Trigger does not turn the tool on or off.** Any tool that cannot be controlled with the Trigger is dangerous and must not be used until repaired.

d. **Disconnect the tool from the air source before making adjustments, doing tool maintenance, clearing jams, touching the Workpiece Contact, leaving work area, loading, or unloading the tool.** Such precautionary measures reduce the risk of injury to persons.

e. ***Store the tool when it is idle out of reach of children and other untrained persons.*** A tool is dangerous in the hands of untrained users.

f. **Maintain the tool with care.** A properly maintained tool reduces the risk of binding and is easier to control.

g. **Check for misalignment or binding of moving parts, breakage of parts, and any other condition that affects the tool's operation.** If damaged, have the tool serviced before using. Many accidents are caused by poorly maintained tools. There is a risk of bursting if the tool is damaged.

h. **Use only accessories that are identified by the manufacturer for the specific tool model.** Use of an accessory not intended for use with the specific tool model, increases the risk of injury to persons.

i. **Use only those fasteners listed in the Specifications chart of this manual.** Fasteners not identified for use with this tool by the tool manufacturer are able to result in a risk of injury to persons or tool damage when used in this tool.

Service

a. ***Tool service must be performed only by qualified repair personnel.***

b. **When servicing a tool, use only identical replacement parts. Use only authorized parts.**

c. **Use only the lubricants supplied with the tool or specified by the manufacturer.**

Air Source

a. **Never connect to an air source that is capable of exceeding 200 PSI.** Over pressurizing the tool may cause bursting, abnormal operation, breakage of the tool or serious injury to persons. Use only clean, dry, regulated compressed air at the rated pressure or within the rated pressure range as marked on the tool. Always verify prior to using the tool that the air source has been adjusted to the rated air pressure or within the rated air-pressure range.

b. ***Never use oxygen, carbon dioxide, combustible gases or any bottled gas as an air source for the tool.*** Such gases are capable of explosion and serious injury to persons.

SAVE THESE INSTRUCTIONS.

Specific Safety Instructions

1. **Operators and others in work area MUST wear ANSI-approved safety goggles with side shields during use.** The employer is responsible to enforce the use of eye protection by the operator and others in the work area.
2. **Keep fingers away from Trigger when not driving fasteners to avoid accidental discharge.**
3. **Choice of triggering method is important. Check manual for triggering options.**
4. Always assume the tool contains fasteners.
5. Do not point the tool toward yourself or anyone whether it contains fasteners or not.
6. Do not actuate the tool unless the tool is placed firmly against the workpiece.
7. Respect the tool as a working implement.
8. No horseplay. This tool is not a toy and can be deadly if misused.
9. Do not load the tool with fasteners when any one of the operating controls, such as the Trigger or Workpiece Contact, is activated.
10. Do not remove, tamper with, or otherwise cause the tool operating controls to become inoperable.
11. Do not operate the tool if any portion of the tool operating controls is inoperable, disconnected, altered, or not working properly.
12. Disconnect the tool from the air supply when:
    a. Unattended.
    b. Performing any maintenance or repair.
    c. Clearing a jam.
    d. Moving the tool to a new location.
13. Do not make any modifications to this tool.
14. Refer to the tool maintenance instructions for detailed information on the proper maintenance of the tool.
15. Drive fasteners into an appropriate work surface only. Do not attempt to discharge fasteners into surfaces too hard to penetrate. Do not drive fasteners on top of other fasteners, or at too steep of an angle. Fasteners can ricochet causing personal injury.
16. Do not drive fasteners too close to the edge of a workpiece. They may split the workpiece and fly free, causing personal injury.
17. Keep clear of the workpiece near the area being fastened. Fasteners may bend sideways during driving, causing them to exit the workpiece at an unexpected point, causing personal injury.
18. Transport tool safely. Always disconnect air supply when moving the tool. Carry the tool by the handle and avoid contact with the Trigger.
19. Hold tool away from head and body. During operation the tool may kick back causing injury.
20. Do not drive fasteners into a workpiece that has people, utility lines, or other objects behind or inside it.
21. Keep balance while using this tool. Keep area below clear if working in an elevated location, and secure air hose to prevent falls from bystanders accidentally pulling on it.
22. Obey the manual for the air compressor used to power this tool.
23. Install an in-line shutoff valve to allow immediate control over the air supply in an emergency, even if a hose is ruptured.
24. Do not engrave or stamp anything into the housing to avoid weakening it.
25. The warnings and precautions discussed in this manual cannot cover all possible conditions and situations that may occur. It must be understood by the operator that common sense and caution are factors which cannot be built into this product, but must be supplied by the operator.

Vibration Precautions

This tool vibrates during use.
Repeated or long-term exposure to vibration may cause temporary or permanent physical injury, particularly to the hands, arms and shoulders.
To reduce the risk of vibration-related injury:

1. Do not smoke during use. Nicotine reduces the blood supply to the hands and fingers, increasing the risk of vibration-related injury.
2. Wear suitable gloves to reduce the vibration effects on the user.
3. Use tools with the lowest vibration when there is a choice between different processes.
4. Include vibration-free periods each day of work.
5. Grip tool as lightly as possible (while still keeping safe control of it). Let the tool do the work.
6. To reduce vibration, maintain tool as explained in this manual. If abnormal vibration occurs, stop immediately.

SAVE THESE INSTRUCTIONS.

Pierce™

Specifications

Maximum Air Pressure	120 PSI
Air Inlet	3/8"–18 NPT
Air Consumption	4.7 CFM @ 90 PSI 60 Cycles per Minute
Actuation System	Single Sequential or Contact Actuation (switchable)
Nail Type	0.113"–0.131" Diameter, 2"–3-1/4" Long, 21° Plastic-collated Round Head Nails
Magazine Capacity	64–70 Pieces

Components and Controls

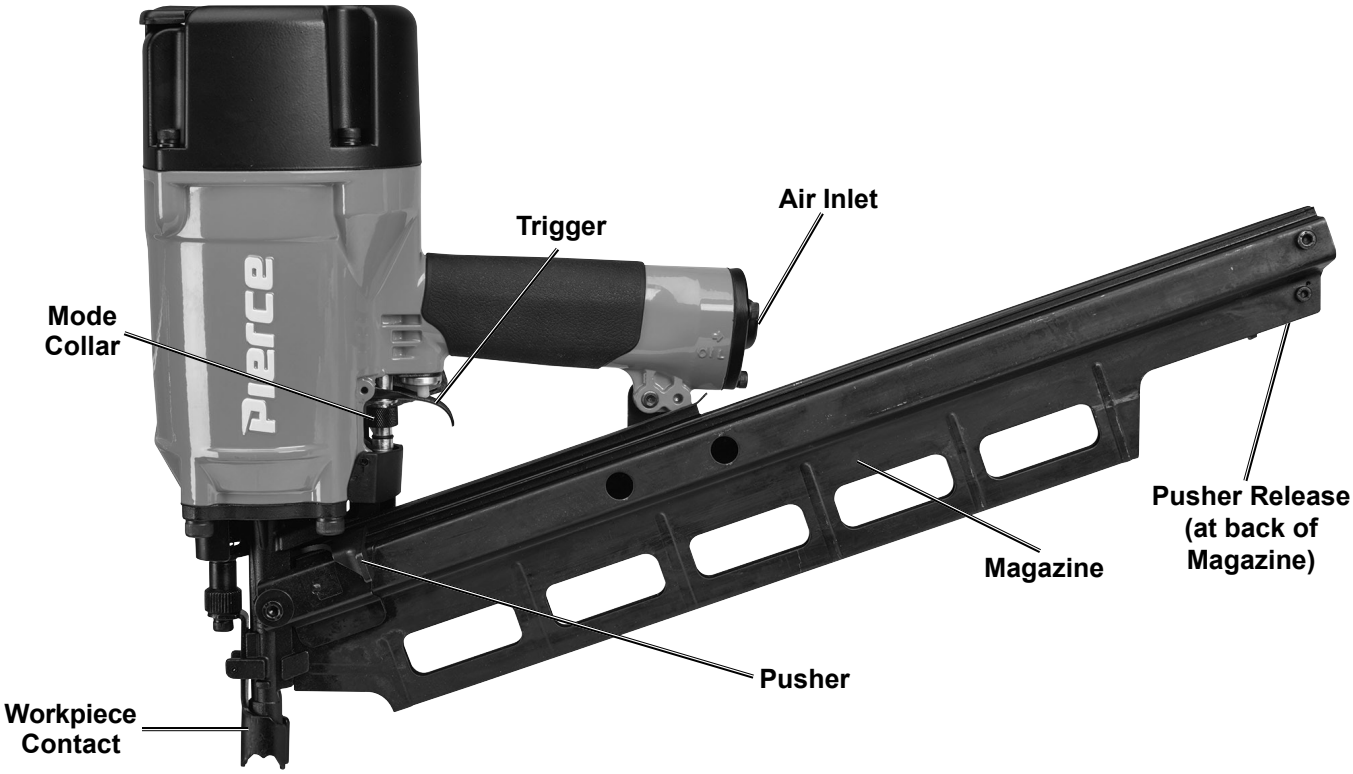

Workpiece Contact - The Workpiece Contact helps prevent the tool from discharging unless it is pressed against an object.

Initial Tool Set Up/Assembly

Read the ENTIRE IMPORTANT SAFETY INFORMATION section at the beginning of this manual including all text under subheadings therein before set up or use of this product.

Note: For additional information regarding the parts listed in the following pages, refer to the Assembly Diagram near the end of this manual.

Air Supply

WARNING

TO PREVENT EXPLOSION:
Use only clean, dry, regulated, compressed air to power this tool. Do not use oxygen, carbon dioxide, combustible gases, or any other bottled gas as a power source for this tool.

1. Incorporate a filter, regulator with pressure gauge, oiler, in-line shutoff valve, and quick coupler for best service, as shown on Figure A on page 9 and Figure B on page 10. **An in-line shutoff ball valve is an important safety device because it controls the air supply even if the air hose is ruptured. The shutoff valve should be a ball valve because it can be closed quickly.**

Note: If an automatic oiler system is not used, add a few drops of Pneumatic Tool Oil into the airline connection before operation. Add a few more drops after each hour of continual use.

Note: This air tool may be shipped with a protective plug covering the air inlet. Remove this plug before set up.

2. Attach an air hose to the compressor's air outlet. Connect the air hose to the air inlet of the tool. Other components, such as a coupler plug and quick coupler, will make operation more efficient, but are not required.

WARNING! TO PREVENT SERIOUS INJURY FROM ACCIDENTAL DISCHARGE:
Do not install a female quick coupler on the tool. Such a coupler contains an air valve that will allow the air tool to retain pressure and operate accidentally after the air supply is disconnected.

Note: Air flow, and therefore tool performance, can be hindered by undersized air supply components.

3. The air hose must be long enough to reach the work area with enough extra length to allow free movement while working.
4. Release the tool's Trigger and empty its magazine.
5. Close the in-line safety valve between the compressor and the tool.
6. Turn on the air compressor according to the manufacturer's directions and allow it to build up pressure until it cycles off.
7. Adjust the air compressor's output regulator so that the air output is enough to properly power the tool, but the output will not exceed the tool's maximum air pressure at any time. Adjust the pressure gradually, while checking the air output gauge to set the right pressure range.
8. The air pressure setting must not exceed job site regulations/restrictions. The air pressure setting must not exceed 90 PSI when being used with workpieces that have a thickness of less than 1-3/4″.
9. Inspect the air connections for leaks. Repair any leaks found.
10. If the tool will not be used at this time, turn off and detach the air supply, safely discharge any residual air pressure, and release the Trigger to prevent accidental discharge.

Note: Residual air pressure should not be present after the tool is disconnected from the air supply. However, it is a good safety measure to attempt to discharge the tool in a safe fashion after disconnecting to ensure that the tool is disconnected and unpowered.

Figure A: Portable Air Supply Setup

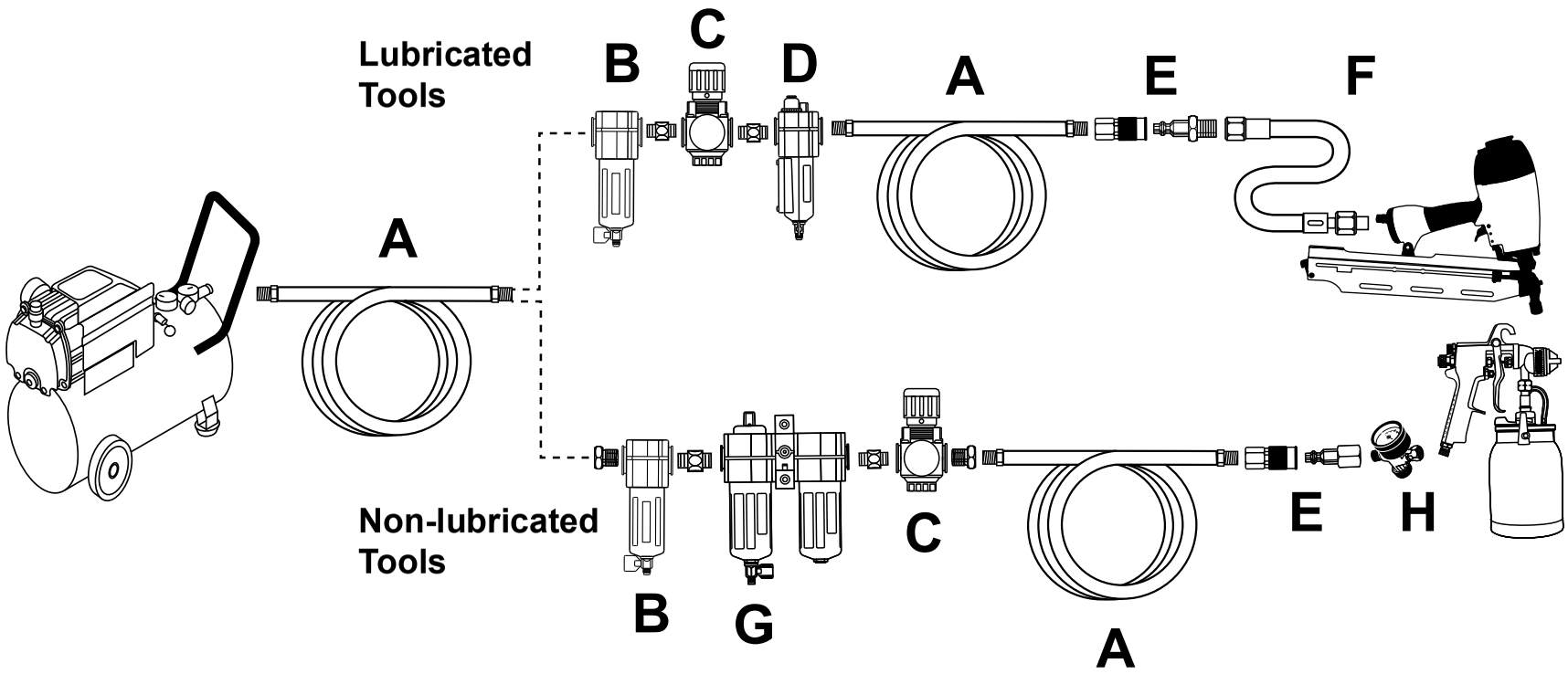

	Description	Function
A	Air Hose	Connects air to tool
B	Filter	Prevents dirt and condensation from damaging tool or workpiece
C	Regulator	Adjusts air pressure to tool
D	Lubricator (optional)	For air tool lubrication
E	Coupler and Plug	Provides quick connection and release
F	Leader Hose (optional)	Increases coupler life
G	Air Cleaner / Dryer (optional)	Prevents water vapor from damaging workpiece
H	Air Adjusting Valve (optional)	For fine tuning airflow at tool

Figure B: Stationary Air Supply Setup

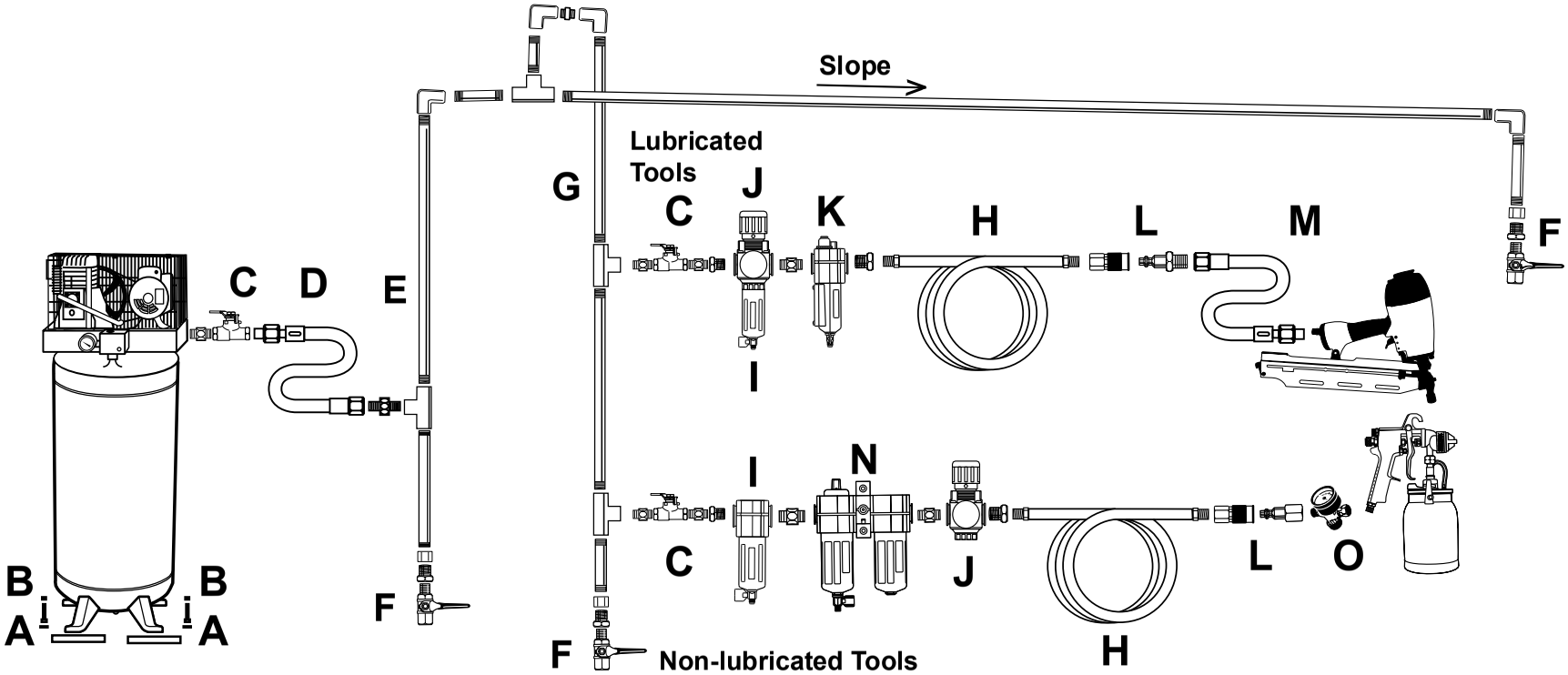

	Description	Function
A	Vibration Pads	For noise and vibration reduction
B	Anchor Bolts	Secures air compressor in place
C	Ball Valve	Isolates sections of system for maintenance
D	Isolation Hose	For vibration reduction
E	Main Air Line - 3/4″ minimum recommended	Distributes air to branch lines
F	Ball Valve	To drain moisture from system
G	Branch Air Line -1/2″ minimum recommended	Brings air to point of use
H	Air Hose	Connects air to tool
I	Filter	Prevents dirt and condensation from damaging tool or workpiece
J	Regulator	Adjusts air pressure to tool
K	Lubricator (optional)	For air tool lubrication
L	Coupler and Plug	Provides quick connection and release
M	Leader Hose (optional)	Increases coupler life
N	Air Cleaner / Dryer (optional)	Prevents water vapor from damaging workpiece
O	Air Adjusting Valve (optional)	For fine tuning airflow at tool

Read the ENTIRE IMPORTANT SAFETY INFORMATION section at the beginning of this manual including all text under subheadings therein before set up or use of this product.

Inspect tool before use, looking for damaged, loose, and missing parts. If any problems are found, do not use tool until repaired.

Workpiece and Work Area Set Up

1. Designate a work area that is clean and well-lit. The work area must not allow access by children or pets to prevent distraction and injury.
2. Route the air hose along a safe route to reach the work area without creating a tripping hazard or exposing the air hose to possible damage. The air hose must be long enough to reach the work area with enough extra length to allow free movement while working.
3. Secure loose workpieces using a vise or clamps (not included) to prevent movement while working.
4. There must not be hazardous objects (such as utility lines or foreign objects) nearby that will present a hazard while working.

Single-Sequential Actuation Mechanism Definition

The single-sequential actuation mechanism is designed to allow accurate placement of fasteners. Use the switch near the trigger to change modes. The tool should only actuate if the Workpiece Contact is pressed against the workpiece prior to pulling the Trigger. It should only actuate again if the Trigger is released and squeezed again. The tool should not actuate if the Workpiece Contact is not pressed against an object.

Single-Sequential Actuation Mechanism Testing Procedure

⚠WARNING

TO PREVENT SERIOUS INJURY FROM ACCIDENTAL DISCHARGE:
Empty the tool before this procedure. Point the tool at a piece of scrap wood when testing.

1. Disconnect the tool from the air supply.
2. Empty the magazine of fasteners.
3. Check that the Trigger and the Workpiece Contact move freely, without sticking.
4. Connect the air supply to the tool and set within the Operating Air Pressure indicated on the Specification chart.
5. Test the tool by pressing the Workpiece Contact against the workpiece without pulling the Trigger.
   The tool must not cycle (actuate).
   If it cycles (actuates), stop immediately and have it repaired by a qualified service technician.
6. Hold the tool away, or off of the workpiece. The Workpiece Contact should return to its original position. Squeeze the Trigger.
   The tool must not cycle (actuate).
   If it cycles (actuates), stop immediately and take the tool to a qualified service technician.
7. Press the Workpiece Contact against the workpiece and squeeze the Trigger.
   The tool must cycle (actuate) only once.
   Release the Trigger, slide the Nailer to a fresh piece of wood, and squeeze it again.
   The tool must cycle (actuate) again only once.
   With the Trigger depressed, carefully lift the tool and press it against the workpiece again.
   The tool must not cycle (actuate).
   If it fails to act in the manner explained in bold, have it repaired by a qualified service technician.

Contact Actuation Mechanism Definition

The contact actuation mechanism allows rapid placement of fasteners. Use the switch near the trigger to change modes. The tool should only actuate if the Workpiece Contact is pressed against the workpiece and the Trigger is pulled. It should actuate again if the Trigger is released and pulled OR if the Workpiece Contact is lifted and pressed against the workpiece again. The tool should not actuate if the Workpiece Contact is not pressed against an object. **Contact Actuation should only be enabled and used by skilled operators who are aware of the hazards and use proper, safe work practices.**

Contact Actuation Mechanism Testing Procedure

⚠WARNING

TO PREVENT SERIOUS INJURY FROM ACCIDENTAL DISCHARGE:
Empty the tool before this procedure. Point the tool at a piece of scrap wood when testing.

1. Disconnect the tool from the air supply.
2. Empty the magazine of fasteners.
3. Check that the Trigger and the Workpiece Contact move freely, without sticking.
4. Connect the air supply to the tool and set within the Operating Air Pressure indicated on the Specification chart.
5. Test the tool by pressing the Workpiece Contact against the workpiece without pulling the Trigger.
   The tool must not cycle (actuate).
   If it cycles (actuates), stop immediately and have it repaired by a qualified service technician.
6. Hold the tool away, or off of the workpiece. The Workpiece Contact should return to its original position. Squeeze the Trigger.
   The tool must not cycle (actuate).
   If it cycles (actuates), stop immediately and take the tool to a qualified service technician.
7. Press the Workpiece Contact against the workpiece and squeeze the Trigger.
   The tool must cycle (actuate) only once.
   Release the Trigger, slide the Nailer to a fresh piece of wood, and squeeze it again.
   The tool must cycle (actuate) again only once.
   With the Trigger depressed, carefully lift the tool and press it against the workpiece again in a new location.
   The tool must cycle (actuate) again only once.
   If it fails to act in the manner explained in bold, have it repaired by a qualified service technician.

Switchable Trigger

⚠WARNING

TO PREVENT SERIOUS INJURY FROM ACCIDENTAL DISCHARGE:

- **Release Trigger and point Tool in a safe direction before changing actuation mode.**
- **ONLY operate the tool with the Mode Collar fully in one of the actuation mode positions. Check that the Mode Collar is completely seated after adjustment.**

1. Move the Mode Collar toward the Trigger to enable **Single Sequential** operation for precise placement of fasteners.
2. Move the Mode Collar away from the Trigger to enable **Contact Actuation** operation for rapid placement of fasteners.
   Only a skilled operator who is aware of the hazards and uses proper, safe work practices should use contact actuation operation.
3. Confirm that the Mode Collar is completely seated in one of the positions before using the Nailer.

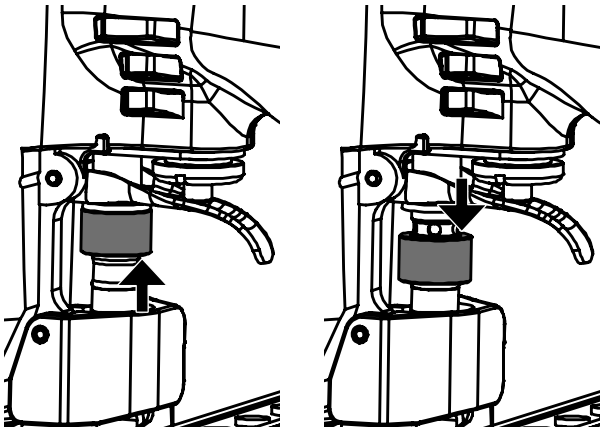

Single Sequential Position | **Contact Actuation Position**

Figure C: Trigger Mode Collar Positions

Loading the Tool

⚠WARNING

TO PREVENT SERIOUS INJURY FROM ACCIDENTAL DISCHARGE, BEFORE LOADING:

- **Wear ANSI-approved safety goggles with side shields.**
  Other people in the work area must also wear ANSI-approved impact safety goggles with side shields.
- **Release the Trigger.**
- **Detach the air supply.**
- **Attempt to discharge the Tool into a piece of scrap wood to ensure that it is disconnected and is incapable of driving any fasteners.**

Note: PREVENT JAMS!
Empty magazine before loading nails of different length. Pull Pusher to back of Magazine until it locks to allow old nail strip to be removed.

1. Pull Pusher to back of Magazine until it locks.

CAUTION! TO PREVENT INJURY, do not touch the Pusher Release until finished loading nails.

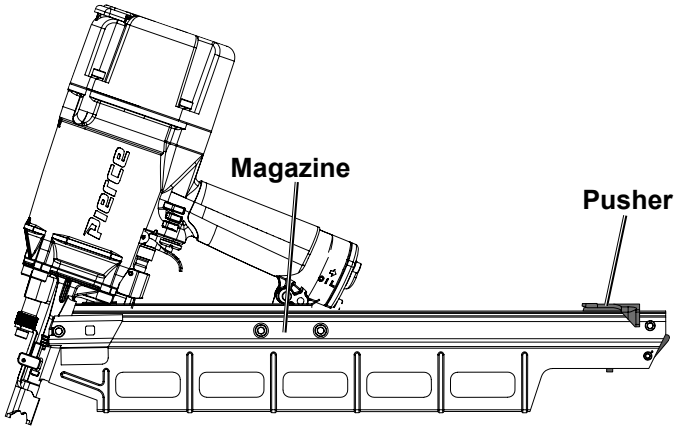

Figure D

2. Orient a strip of nails with the tips down and insert into the opening at the top of the Magazine. Slide the strip completely into the Magazine.

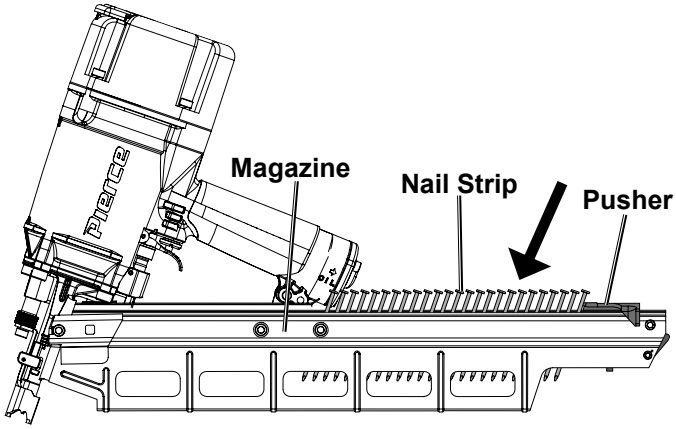

Figure E

3. Press the Pusher Release to release the Pusher, allowing it to slide forward and apply pressure on the strip of nails.

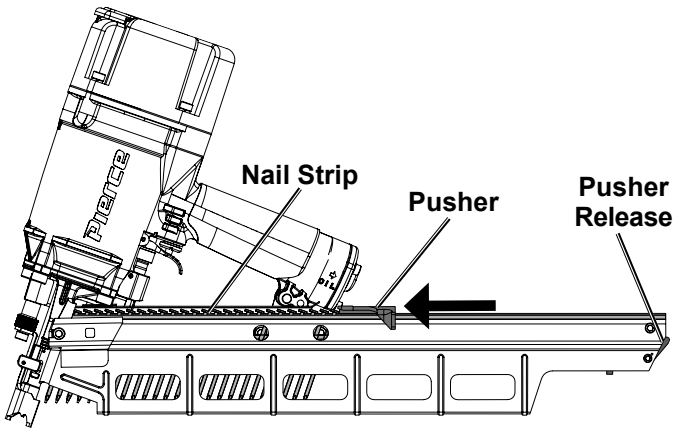

Figure F

General Operating Instructions

1. Before each use, test the tool as directed in the prior section.

2. If an automatic oiler is not used, add a few drops of Pneumatic Tool Oil to the airline connection before use. Add a few drops more after each hour of continual use.

WARNING! TO PREVENT SERIOUS INJURY: Keep second hand away from tool discharge area, especially if holding workpiece. Tool applies extreme force to fastener, and fasteners may deflect or discharge in an unexpected direction.

CAUTION! TO PREVENT INJURY: Do not hold tool near body while driving. Tool recoil can cause injury.

3. Position tool at desired fastener location and depress the Workpiece Contact fully against the workpiece. Squeeze the Trigger to discharge a fastener.

Note: PREVENT DOUBLE DRIVING. Allow the Tool to recoil from the workpiece — do not force it against the workpiece.

4. Driving multiple fasteners using contact actuation mode: Squeeze and hold Trigger, then push Workpiece Contact to discharge one fastener. Move and push Workpiece Contact again to discharge additional fasteners.

5. **To change driving depth: Disconnect air supply and keep Workpiece Contact pointed away.** To reduce nail depth, turn the Depth Adjustment Knob clockwise. To increase nail depth, turn the Depth Adjustment Knob counterclockwise.

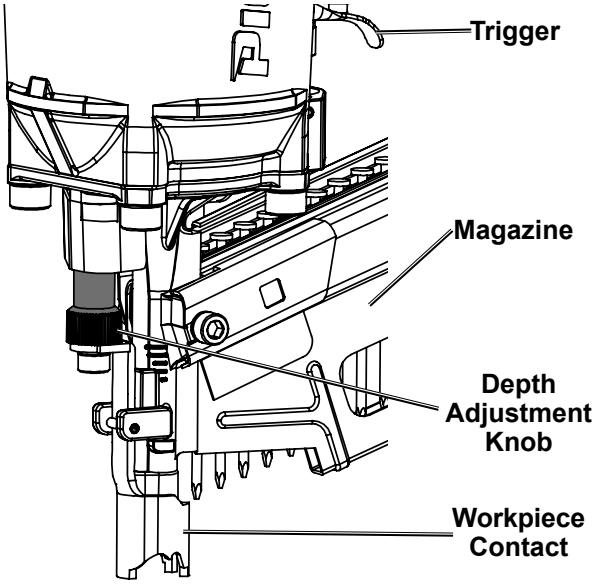

Figure G

6. If, at the maximum depth setting, the tool requires more force to accomplish the task, verify that the tool receives sufficient, unobstructed airflow (CFM) and increase the pressure (PSI) output of the regulator up to the maximum air pressure rating of this tool.

   CAUTION! TO PREVENT INJURY FROM TOOL FAILURE: Do not exceed the tool's maximum air pressure rating. If the tool still does not have sufficient force at maximum pressure and sufficient airflow, then a larger tool may be required.

7. **After use, to prevent accidents:**
   a. **Release the Trigger.**
   b. **Detach the air supply.**
   c. **Slide the Mode Collar up towards the Trigger.**
   d. **Disengage the Pusher by pulling it to the back of the magazine until it locks.**
   e. **Empty the Magazine.**
   f. **Attempt to discharge the tool into a piece of scrap wood to ensure that it is disconnected and is incapable of driving any fasteners.**
   g. **Release the Trigger again.**
   h. **Clean and oil the Drive Guide and Magazine. Clean external surfaces with clean, dry cloth.**
   i. **Store indoors out of children's reach.**

User-Maintenance Instructions

Procedures not specifically explained in this manual must be performed only by a qualified technician.

WARNING

TO PREVENT SERIOUS INJURY FROM ACCIDENTAL DISCHARGE,
BEFORE ANY MAINTENANCE OR REPAIRS ARE DONE (including clearing jams):

- **Wear ANSI-approved safety goggles with side shields.**
  Other people in the work area must also wear ANSI-approved impact safety goggles with side shields.
- **Release the Trigger.**
- **Detach the air supply.**
- **Attempt to discharge the Tool into a piece of scrap wood to ensure that it is disconnected and is incapable of driving any fasteners.**
- **Empty the magazine and leave it open during service.**
  The Magazine is spring-loaded and may cause parts or a fastener to fly out of the Tool.

TO PREVENT SERIOUS INJURY FROM TOOL FAILURE:
Do not use damaged equipment.
If abnormal noise, vibration, or leaking air is detected, have the problem corrected before further use.

TO PREVENT EXPLOSION: Lubricate only with specified lubricants. Lubricate the air inlet using only pneumatic tool oil. Lubricate the internal mechanism using only white lithium grease. Other lubricants may damage the mechanism and may be highly flammable, causing an explosion.

Note: These procedures are in addition to the regular checks and maintenance explained as part of the regular operation of the air-operated tool.

1. **BEFORE EACH USE,** inspect the general condition of the tool. Check for:
   - proper Workpiece Contact operation
   - free Workpiece Contact and Trigger movement
   - loose hardware or housing
   - misalignment or binding of moving parts
   - cracked or broken parts
   - any other condition that may affect its safe operation.

2. **AFTER EACH USE,** perform the following procedures:
   - detach the air supply and empty the Magazine
   - attempt to discharge the tool into a piece of scrap wood to ensure that it is disconnected and is incapable of driving any fasteners
   - clean the Drive Guide and Magazine to remove any accumulated dirt and debris. Lightly oil the Drive Guide
   - clean external surfaces with clean, dry cloth
   - store indoors out of children's reach.

3. **Daily - Air Supply Maintenance:**
   Every day, perform maintenance on the air supply according to the component manufacturers' instructions. Maintain the lubricator's oil level. Drain the moisture filter regularly.
   Performing routine maintenance on the air supply will allow the tool to operate more safely and will also reduce wear on the tool.

Clearing Jams

⚠WARNING

**TO PREVENT SERIOUS INJURY FROM ACCIDENTAL DISCHARGE,
BEFORE ANY MAINTENANCE OR REPAIRS ARE DONE (including clearing jams):**

- **Wear ANSI-approved safety goggles with side shields.**
  Other people in the work area must also wear ANSI-approved impact safety goggles with side shields.
- **Release the Trigger.**
- **Detach the air supply.**
- **Attempt to discharge the tool into a piece of scrap wood to ensure that it is disconnected and is incapable of driving any fasteners.**
- **Empty the Magazine and leave it open during service.
  The Magazine is spring-loaded and may cause parts or a fastener to fly out of the tool.**

Note: When clearing jams, verify that the correct nail type is being used. Confirm nail collation type, diameter, angle, type, and length. Correct as needed.

1. If a fastener is jammed in the discharge area, disconnect tool from air hose, pull the Pusher to the back of the Magazine until it locks in place.

CAUTION! TO PREVENT INJURY, do not touch the Pusher Release while clearing jams.

2. Slide the fastener strip back and pull it out of the top of the Magazine.
3. Use pliers to carefully remove any stuck fasteners from the jammed Nailer.
4. Inspect the Workpiece Contact for any bends or breakage. If it is damaged, do not use the Nailer until it is repaired by a qualified technician.
5. If a fastener is jammed in the Magazine, disconnect tool from air hose, pull the Pusher to the back of the Magazine until it locks in place.

CAUTION! TO PREVENT INJURY, do not touch the Pusher Release while clearing jams.

6. Slide the fastener strip back and pull it out of the top of the Magazine.
7. Use a screwdriver to release the jammed fastener by probing the openings in the Magazine.
8. Pull out the jammed fastener and any remaining fastener strip from the Magazine.
   Dispose of the remaining fastener strip; it is likely bent or damaged and may cause repeated jamming or damage to the tool if reused.
9. After clearing the jam, clean the Drive Guide and Magazine to remove any accumulated dirt and debris. Lightly oil the Drive Guide.
10. Make sure that the Workpiece Contact moves smoothly without binding.
11. If the jam cannot be cleared using the methods above, have the tool serviced by a qualified technician.

Troubleshooting

Problem	Possible Causes	Likely Solutions
Insufficient fastener depth.	1. Incorrect tool depth setting. 2. Not enough air pressure. 3. Incorrect lubrication or not enough lubrication. 4. Blocked air inlet screen (if equipped). 5. Mechanism contaminated.	1. Adjust depth setting, if available. 2. Check for loose connections and make sure that air supply is providing enough air pressure (PSI) to the tool's air inlet. **Do not exceed maximum air pressure.** 3. Lubricate using air tool oil and grease according to directions. 4. Clean air inlet screen of buildup. 5. Have qualified technician clean and lubricate mechanism. Install in-line filter in air supply as stated in Initial Set Up: Air Supply.
Fasteners drive too deeply.	1. Incorrect tool depth setting. 2. Too much air pressure.	1. Adjust depth setting, if available. 2. Reduce air supply pressure (PSI).
Tool cycles without driving fastener.	1. Jammed fastener. 2. Tool empty. 3. Incorrect fasteners used. 4. Magazine dirty. 5. Insufficient air flow.	1. Clear jammed fastener according to Clearing Jams instructions. 2. Reload with correct fasteners. 3. Empty, then reload with correct fasteners. 4. Clean magazine and pusher. 5. Check for loose connections and make sure that air supply is providing enough air flow (CFM) and pressure (PSI) to the tool's air inlet. **Do not exceed maximum air pressure.**
Frequent jamming.	Incorrect nail type.	Confirm nail collation type, diameter, angle, type, and length. Correct as needed.
Severe air leakage. (Slight air leakage is normal, especially on older tools.)	1. Cross-threaded housing components. 2. Loose housing. 3. Damaged valve or housing. 4. Dirty, worn or damaged valve.	1. Check for incorrect alignment and uneven gaps. If cross-threaded, disassemble and replace damaged parts before use. 2. Tighten housing assembly. If housing cannot tighten properly, internal parts may be misaligned. 3. Replace damaged components. 4. Clean or replace valve assembly.

Follow all safety precautions whenever diagnosing or servicing the tool. Disconnect air supply before service.

PLEASE READ THE FOLLOWING CAREFULLY

THE MANUFACTURER AND/OR DISTRIBUTOR HAS PROVIDED THE PARTS LIST AND ASSEMBLY DIAGRAM IN THIS MANUAL AS A REFERENCE TOOL ONLY. NEITHER THE MANUFACTURER OR DISTRIBUTOR MAKES ANY REPRESENTATION OR WARRANTY OF ANY KIND TO THE BUYER THAT HE OR SHE IS QUALIFIED TO MAKE ANY REPAIRS TO THE PRODUCT, OR THAT HE OR SHE IS QUALIFIED TO REPLACE ANY PARTS OF THE PRODUCT. IN FACT, THE MANUFACTURER AND/OR DISTRIBUTOR EXPRESSLY STATES THAT ALL REPAIRS AND PARTS REPLACEMENTS SHOULD BE UNDERTAKEN BY CERTIFIED AND LICENSED TECHNICIANS, AND NOT BY THE BUYER. THE BUYER ASSUMES ALL RISK AND LIABILITY ARISING OUT OF HIS OR HER REPAIRS TO THE ORIGINAL PRODUCT OR REPLACEMENT PARTS THERETO, OR ARISING OUT OF HIS OR HER INSTALLATION OF REPLACEMENT PARTS THERETO.

Parts List

Part	Description	Qty
1	Bolt M6x45	3
2	Exhaust Cover	1
3	Bolt M6x25	4
4	Cylinder Cap	1
5	Gasket	1
6	Exhaust Seal (A)	1
7	Deflector	1
8	Exhaust Seal (B)	1
9	Exhaust Valve	1
10	Piston Bumper	1
11	O-Ring 50.5x3.5	1
12	Piston	1
13	Driver	1
14	O-Ring 90x2	3
15	O-Ring 62.7x2.45	1
16	Cylinder Collar	1
17	O-Ring 79x2.45	1
18	Cylinder	1
19	O-Ring 69x2.45	1
20	Cylinder Seal	1
21	Cylinder Spring	1
22	Spring Seat	1
23	Cylinder Ring	1
24	Bumper	1
25	Exhaust Sleeve	1
26	Body	1
27	O-Ring 63.5x2.4	1
28	Body Seal	1
29	Bolt M6x16	2
30	Guard Cover	1
31	Nose	1
32	Bolt M8x25	4
33	Roll Pin 3x20	1
34	Handle Grip	1
35	Bolt M8x20	1
36	End Cap Seal	1
37	End Cap	1
38	Bolt M5x18	3
39	Roll Pin 3x30	1
40	Trigger	1
41	Roll Pin 3x45	1
42	Safety Guard	1
43	Safety Spring	1
44	Workpiece Contact Bracket	1
45	Depth Adjustment Knob	1

Part	Description	Qty
46	Spring	2
47	Steel Ball	2
48	Workpiece Contact	1
49	Washer	4
50	Bolt M6x10	1
51	Plunger Spring (A)	1
52	O-Ring 3.8x1.9	1
53	Plunger (A)	1
54	O-Ring 10.7x1.5	2
55	Valve Bushing	1
56	O-Ring 8.8x1.9	2
57	Mode Collar	1
58	O-Ring 6.5x1.5	1
59	O-Ring 4.5x1.5	1
60	Washer	1
61	Plunger Spring (B)	1
62	Plunger (B)	1
63	Valve Rubber Washer	1
64	Rubber Ball	1
65	Valve Plate	1
66	O-Ring 11.5x1.5	1
67	Trigger Valve Bushing	1
68	Trigger Stem	1
69	O-Ring 2.9x1.8	1
70	Pin	1
71	Roll Spring	1
72	Pusher	1
73	Nut M4	1
74	Spring Sleeve	1
75	Pusher Release	1
76	Stop Spring	1
77	Bolt M4x16	1
78	Bolt M5x45	1
79	Magazine	1
80	Magazine Pin	1
81	Nut M5	1
82	Nut M6	2
83	Handle Arm	1
84	Bolt M6x16	2
85	Lock Washer 6	5
86	Lock Washer 8	1
87	Washer	1
P1	Driver Unit	1
P2	Plunger Valve	1
P3	Trigger Valve	1

Record Product's Serial Number Here:_____

Note: If product has no serial number, record month and year of purchase instead.

Note: Some parts are listed and shown for illustration purposes only, and are not available individually as replacement parts.

Assembly Diagram

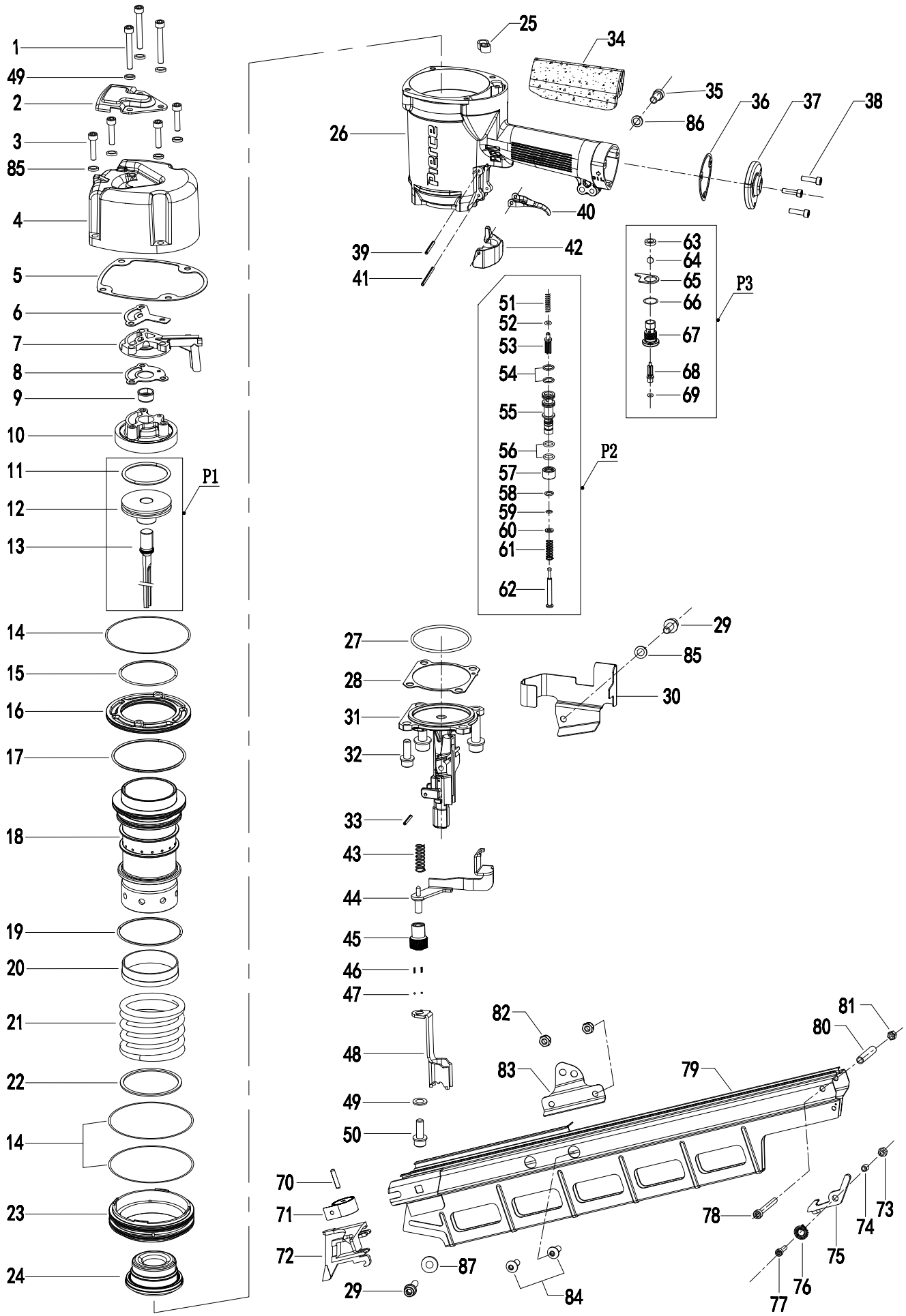

Limited 90 Day Warranty

Harbor Freight Tools Co. makes every effort to assure that its products meet high quality and durability standards, and warrants to the original purchaser that this product is free from defects in materials and workmanship for the period of 90 days from the date of purchase. This warranty does not apply to damage due directly or indirectly, to misuse, abuse, negligence or accidents, repairs or alterations outside our facilities, criminal activity, improper installation, normal wear and tear, or to lack of maintenance. We shall in no event be liable for death, injuries to persons or property, or for incidental, contingent, special or consequential damages arising from the use of our product. Some states do not allow the exclusion or limitation of incidental or consequential damages, so the above limitation of exclusion may not apply to you. THIS WARRANTY IS EXPRESSLY IN LIEU OF ALL OTHER WARRANTIES, EXPRESS OR IMPLIED, INCLUDING THE WARRANTIES OF MERCHANTABILITY AND FITNESS.

To take advantage of this warranty, the product or part must be returned to us with transportation charges prepaid. Proof of purchase date and an explanation of the complaint must accompany the merchandise. If our inspection verifies the defect, we will either repair or replace the product at our election or we may elect to refund the purchase price if we cannot readily and quickly provide you with a replacement. We will return repaired products at our expense, but if we determine there is no defect, or that the defect resulted from causes not within the scope of our warranty, then you must bear the cost of returning the product.

This warranty gives you specific legal rights and you may also have other rights which vary from state to state.

Pierce™

3491 Mission Oaks Blvd. • PO Box 6009 • Camarillo, CA 93011 • 1-888-866-5797