Owner's Manual & Safety Instructions

Save This Manual Keep this manual for the safety warnings and precautions, assembly, operating, inspection, maintenance and cleaning procedures. Write the product's serial number in the back of the manual near the assembly diagram (or month and year of purchase if product has no number). Keep this manual and the receipt in a safe and dry place for future reference. 22h

PITTSBURGH® AUTOMOTIVE Racing

2.5 TON ALUMINUM JACK LOW PROFILE with Rapid Pump

Item	64543
Weight Capacity	2-1/2 Tons (5,000 lb)
Maximum Height	18-5/8″
Minimum Height	3-2/3″

Visit our website at: http://www.harborfreight.com
Email our technical support at: productsupport@harborfreight.com

When unpacking, make sure that the product is intact and undamaged. If any parts are missing or broken, please call 1-888-866-5797 as soon as possible.

Copyright© 2018 by Harbor Freight Tools®. All rights reserved.
No portion of this manual or any artwork contained herein may be reproduced in any shape or form without the express written consent of Harbor Freight Tools.
Diagrams within this manual may not be drawn proportionally. Due to continuing improvements, actual product may differ slightly from the product described herein. Tools required for assembly and service may not be included.

⚠WARNING

Read this material before using this product. Failure to do so can result in serious injury. SAVE THIS MANUAL.

Table of Contents

Safety 2
Setup 3
Operation 4
Maintenance 6
Parts List and Assembly Diagram 7
Warranty 8

WARNING SYMBOLS AND DEFINITIONS	
⚠	This is the safety alert symbol. It is used to alert you to potential personal injury hazards. Obey all safety messages that follow this symbol to avoid possible injury or death.
⚠ DANGER	Indicates a hazardous situation which, if not avoided, will result in death or serious injury.
⚠ WARNING	Indicates a hazardous situation which, if not avoided, could result in death or serious injury.
⚠ CAUTION	Indicates a hazardous situation which, if not avoided, could result in minor or moderate injury.
NOTICE CAUTION	Addresses practices not related to personal injury.

IMPORTANT SAFETY INFORMATION

Floor Jack Safety Warnings

1. Study, understand, and follow all instructions before operating this device.
2. Do not exceed rated capacity.
3. Use only on a hard, level surface capable of supporting the load.
4. Support the vehicle with appropriate means immediately after lifting.
5. Failure to heed these markings may result in personal injury and/or property damage.
6. Lift only on areas of the vehicle as specified by the vehicle manufacturer.
7. No alterations shall be made to this product.
8. Only attachments and/or adapters supplied by the manufacturer shall be used.
9. Do not move or dolly the vehicle while on the jack.
10. Never work on, under or around a load supported only by this device.
11. Do not adjust safety valve.
12. Wear ANSI-approved safety goggles and heavy-duty work gloves during use.
13. Keep clear of load while lifting and lowering.
14. Lower load slowly.
15. Apply parking brake and chock tires before lifting vehicle.
16. Inspect before every use; do not use if parts are loose or damaged.
17. Do not use for aircraft purposes.
18. The Handle Socket will be held down by a plastic block under tension. Wear ANSI-approved safety goggles before freeing Handle Socket. Hold Handle Socket down while removing block. After removal, carefully swing Handle Socket up until tension is released.
19. The warnings, precautions, and instructions discussed in this manual cannot cover all possible conditions and situations that may occur. The operator must understand that common sense and caution are factors, which cannot be built into this product, but must be supplied by the operator.

IMPORTANT! Before first use:

Check hydraulic fluid level and fill to 1/4″ below the fill port as needed as stated on page 4. Thoroughly test the Jack for proper operation. If it does not work properly, bleed air from its hydraulic system as stated on page 4.

⚠ SAVE THESE INSTRUCTIONS.

Setup - Before Use:

Read the ENTIRE IMPORTANT SAFETY INFORMATION section at the beginning of this manual including all text under subheadings therein before set up or use of this product.

Note: For additional information regarding the parts listed in the following pages, refer to *Parts List and Assembly Diagram* on page 7.

Tool Set Up

Attaching the Handle

CAUTION! The Handle Socket will be held down by a plastic block under tension. Wear ANSI-approved safety goggles before freeing Handle Socket. Hold Handle Socket down while removing block. After removal, carefully swing Handle Socket up until tension is released.

1. Attach the Upper Handle to the Lower Handle.
2. Loosen the Set Screw and insert the assembled Handle into the Handle Socket.
3. Tighten the Set Screw.

Functions

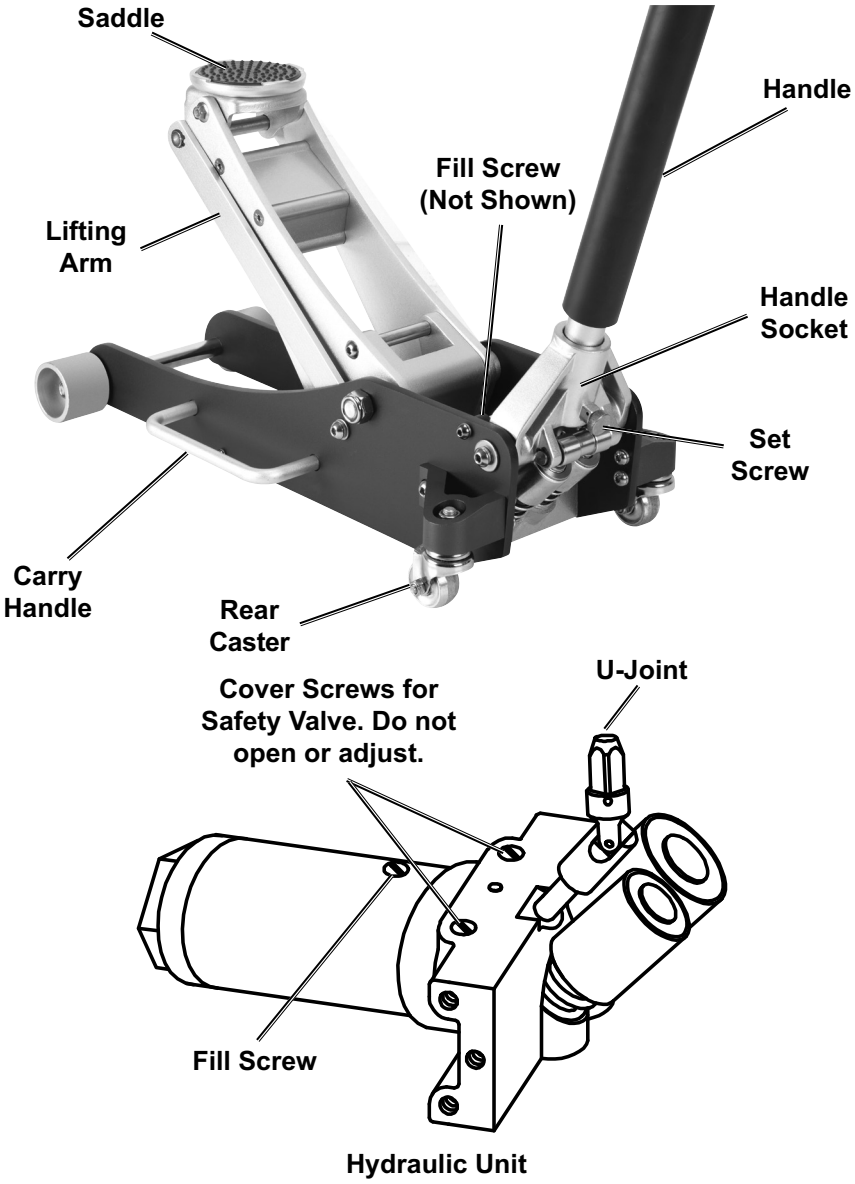

Figure A:

Read the ENTIRE IMPORTANT SAFETY INFORMATION section at the beginning of this manual including all text under subheadings therein before set up or use of this product.

Bleeding

BEFORE EACH USE OR IF JACK PERFORMANCE DECREASES,
check for excessive air and proper hydraulic fluid level in Jack. If Jack appears not to be working properly, it may be necessary to purge its hydraulic system of excessive air as follows:

1. Loosen the Fill Screw.
2. Twist the Handle *counterclockwise* to open the Valve.
3. Check fluid level and, if necessary, top off according to **Adding Hydraulic Fluid** below.
4. Twist the Handle *clockwise* to close the Valve, then pump the Handle quickly several times.
5. Replace Fill Screw.

IMPORTANT: After bleeding the Jack, test the Jack for proper operation prior to its actual use.

6. If, after bleeding, the Jack does not appear to be working properly, do not use it until repaired by a qualified service technician.

Adding Hydraulic Fluid

1. Remove the Fill Screw. Do not remove or loosen Safety Valve Cover Screws.
2. Add high grade hydraulic fluid (sold separately) slowly until the fluid reaches 1/4″ below the top of the Fill Port.

Note: Do not touch the Handle when adding hydraulic fluid.

3. Replace Fill Screw.

Lifting

⚠WARNING

Park vehicle on a flat, level, solid, surface safely away from oncoming traffic. Turn off the vehicle's engine. Place the vehicle's transmission in "PARK" (if automatic) or in its lowest gear (if manual). Set the vehicle's emergency brake. Then chock the wheels that are not being lifted.

1. Slowly twist the Handle *counterclockwise* to lower the Jack. Once the Jack is fully lowered, twist the Handle firmly *clockwise*.
2. Carefully position the Jack's Saddle under the vehicle manufacturer's recommended lifting point. (See vehicle manufacturer's owner's manual for location of frame lifting point.)
3. Pump the Handle until the top of the Saddle has nearly reached the vehicle's lifting point. Position the Saddle directly under the vehicle's lifting point.
4. To lift the vehicle, pump the Handle. Use smooth, full strokes.
5. Select matching jack stands (sold separately) of appropriate capacity. Set the jack stands to the same height according to the manufacturer's instructions, making sure they lock securely into position.
6. Position the jack stands' saddles under the vehicle manufacturer's recommended support points.

WARNING! TO PREVENT SERIOUS INJURY: Ensure that the vehicle support points are fully seated in the saddles of both jack stands. Use a matched pair of jack stands per vehicle to support one end only.

7. Slowly twist the Handle *counterclockwise* to lower the vehicle onto the jack stands' saddles.
8. Once the vehicle is fully seated on the jack stands, continue slowly lowering the Jack until it is completely lowered.
9. Remove the Jack and store safely out of the way.

Lowering

1. Carefully remove all tools, parts, etc., from under the vehicle.
2. Position the Jack's Saddle under the lifting point. Turn the Handle firmly *clockwise* and raise vehicle high enough to clear the jack stands.
3. Carefully remove the jack stands.
4. Slowly turn the Handle *counterclockwise* to lower the vehicle onto the ground.
5. Lower the Jack completely. Store the Jack indoors out of children's reach.

Procedures not specifically explained in this manual must be performed only by a qualified technician.

⚠WARNING

TO PREVENT SERIOUS INJURY FROM TOOL FAILURE:
Do not use damaged equipment. If abnormal noise or vibration occurs, have the problem corrected before further use.

Cleaning, Maintenance, and Lubrication

1. **BEFORE EACH USE,** inspect the general condition of the Jack. Check for:
   - loose hardware,
   - misalignment or binding of moving parts,
   - cracked or broken parts,
   - any condition that may affect its safe operation.
2. **BEFORE EACH USE,** thoroughly test the Jack for proper operation prior to its actual use. If the Jack appears not to be working properly, follow Bleeding instructions on page 4.
3. **AT LEAST ONCE EVERY THREE YEARS,** change the hydraulic fluid:
   a. With the Jack fully lowered, remove the Fill Screw.
   b. Tip the Jack over to allow the old hydraulic fluid to drain out completely. Dispose of the old hydraulic fluid in accordance with local regulations.
   c. With the Jack upright, completely fill the Hydraulic Unit with high grade hydraulic fluid until the fluid is 1/4″ below the top of the Fill Port.
   d. Turn the Handle *counterclockwise* to open the Release Valve.
   e. Pump the Handle up and down quickly several times to purge air from the system.
   f. Recheck fluid level and re-fill as needed.
   g. Replace the Fill Screw.
4. **AFTER EACH USE,** wipe with a clean cloth. Store the Jack indoors out of children's reach.

PITTSBURGH® AUTOMOTIVE

Troubleshooting

⚠WARNING

TO PREVENT SERIOUS INJURY:
Use caution when troubleshooting a malfunctioning jack. Stay well clear of the supported load. Completely resolve all problems before use. If the solutions presented in the Troubleshooting guide do not solve the problem, have a qualified technician inspect and repair the jack before use.

After the jack is repaired: Test it carefully without a load by raising and lowering it fully, checking for proper operation, BEFORE RETURNING THE JACK TO OPERATION.

DO NOT USE A DAMAGED OR MALFUNCTIONING JACK!

POSSIBLE SYMPTOMS						PROBABLE SOLUTION (Make certain that the Jack is not supporting a load while attempting a solution.)
Jack will not lift at its weight capacity	Saddle lowers under load	Pump stroke feels spongy	Saddle will not lift all the way	Handle moves up when jack is under load	Fluid leaking from fill plug	
X	X					Check that Release Valve is fully closed.
						Jack may require bleeding - see instructions on page 4.
X	X			X		Valves may be blocked and may not close fully. To flush the valves: 1. Lower the Saddle and securely close the Release Valve. 2. Manually lift the saddle several inches. 3. Open the release valve by turning the Handle counterclockwise and forcing the saddle down as quickly as possible.
X		X	X			Jack may be low on hydraulic fluid. Check fluid level and refill if needed - see instructions on page 4.
						Jack may require bleeding - see instructions on page 4.
					X	Unit may have too much hydraulic fluid inside. Check fluid level and adjust if needed - see instructions on page 4.

PLEASE READ THE FOLLOWING CAREFULLY

THE MANUFACTURER AND/OR DISTRIBUTOR HAS PROVIDED THE PARTS LIST AND ASSEMBLY DIAGRAM IN THIS MANUAL AS A REFERENCE TOOL ONLY. NEITHER THE MANUFACTURER OR DISTRIBUTOR MAKES ANY REPRESENTATION OR WARRANTY OF ANY KIND TO THE BUYER THAT HE OR SHE IS QUALIFIED TO MAKE ANY REPAIRS TO THE PRODUCT, OR THAT HE OR SHE IS QUALIFIED TO REPLACE ANY PARTS OF THE PRODUCT. IN FACT, THE MANUFACTURER AND/OR DISTRIBUTOR EXPRESSLY STATES THAT ALL REPAIRS AND PARTS REPLACEMENTS SHOULD BE UNDERTAKEN BY CERTIFIED AND LICENSED TECHNICIANS, AND NOT BY THE BUYER. THE BUYER ASSUMES ALL RISK AND LIABILITY ARISING OUT OF HIS OR HER REPAIRS TO THE ORIGINAL PRODUCT OR REPLACEMENT PARTS THERETO, OR ARISING OUT OF HIS OR HER INSTALLATION OF REPLACEMENT PARTS THERETO.

Record Product's Serial Number Here:_____

Note: If product has no serial number, record month and year of purchase instead.

Note: Some parts are listed and shown for illustration purposes only, and are not available individually as replacement parts. Specify UPC 193175350145 when ordering parts.

Parts List and Diagram

Part	Description	Qty
1	Rubber Pad	1
2	Saddle Screw	1
3	Saddle	1
4	Saddle Base	1
5	Pin	1
6	Retaining Ring (16)	2
7	Front Wheel Axle	1
8	Side Plate	2
9	Front Wheel Bushing	2
10	Front Wheel	2
11	Front Wheel Washer	2
12	Nut (M12)	4
13	Carry Handle	2
14	Screw (M6 x 25)	2
15	Washer (M6)	2
16	Screw (M8 x 25)	14
17	Pivot Support Rod	2
18	Screw	2
19	Stop Rod	1
20	Pin	1
21	Link Member	1
22	Arm Side Plate	2
23	Pivot Support Rod Screw	2
24	Washer (M10)	2
25	Washer (M10)	12
26	Screw (M10 x 20)	4
27	Nut (M18)	2
28	Screw (M10 x 35)	2

Part	Description	Qty
29	Screw (M10 x 25)	6
30	Screw (M8 x 25)	6
31	Lock Washer (M8)	6
32	Washer (M10)	2
33	Rear Caster	2
34	Rear Caster Bracket	2
35	Screw (M6 x 25)	2
36	Return Spring	2
37	Retaining Ring (M19)	2
38	Short Pivot Plate	2
39	Hydraulic Unit	1
40	Handle Bumper	1
41	Upper Handle	1
42	Lower Handle	1
43	Handle Retaining Screw	1
44	Retain Ring (M12)	1
45	Roller	1
46	Roller Pin	1
47	Handle Yoke	1
48	Handle Yoke Bolt	2
49	Tie Rod	1
50	Lift Arm Shaft	1
51	Rubber Bumper	2
52	Pin (4 x 45)	1
53	Hydraulic Unit Link	1
54	Short Pivot Plate Bolt	2
55	Link Block	1
56	Link Block Pin	1

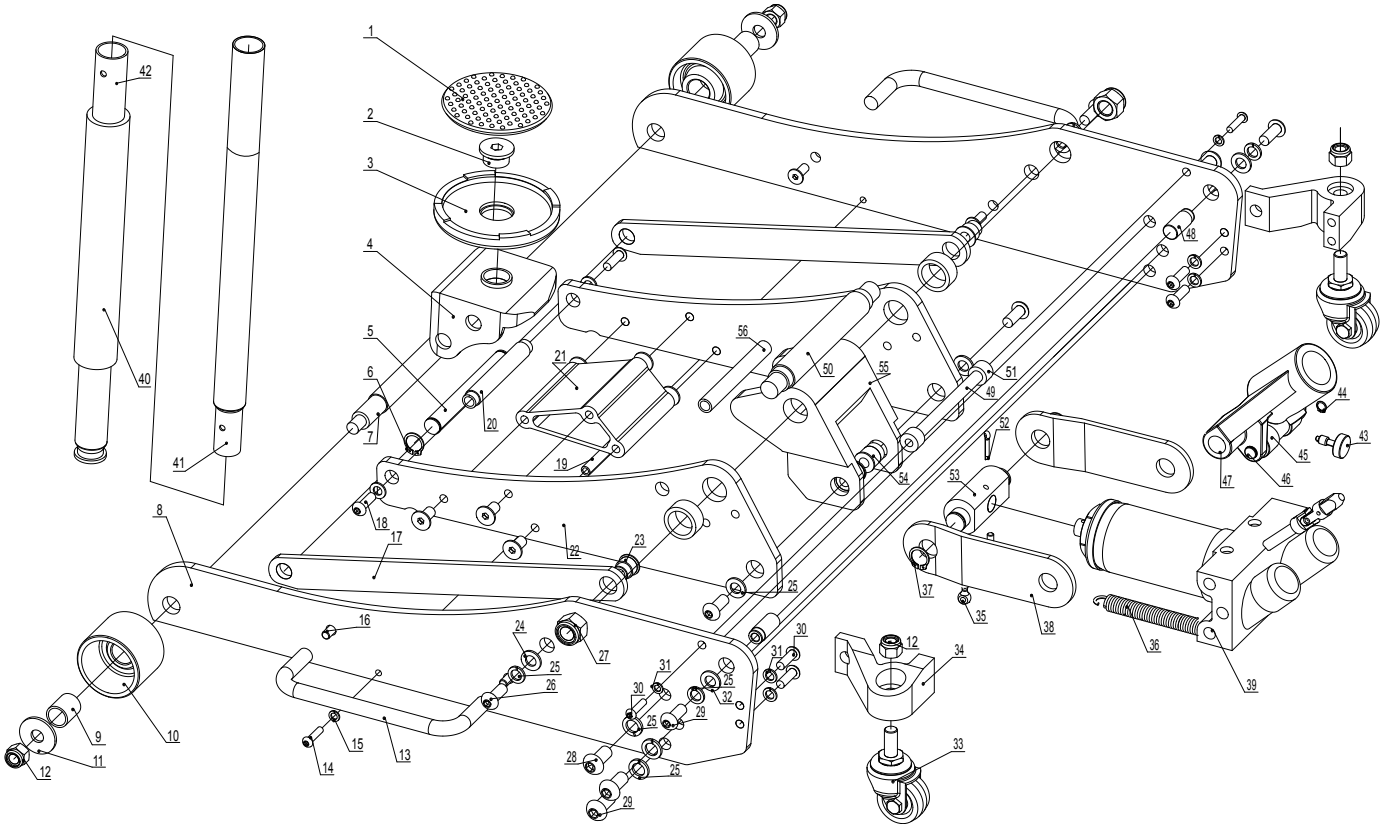

Limited 90 Day Warranty

Harbor Freight Tools Co. makes every effort to assure that its products meet high quality and durability standards, and warrants to the original purchaser that this product is free from defects in materials and workmanship for the period of 90 days from the date of purchase. This warranty does not apply to damage due directly or indirectly, to misuse, abuse, negligence or accidents, repairs or alterations outside our facilities, criminal activity, improper installation, normal wear and tear, or to lack of maintenance. We shall in no event be liable for death, injuries to persons or property, or for incidental, contingent, special or consequential damages arising from the use of our product. Some states do not allow the exclusion or limitation of incidental or consequential damages, so the above limitation of exclusion may not apply to you. THIS WARRANTY IS EXPRESSLY IN LIEU OF ALL OTHER WARRANTIES, EXPRESS OR IMPLIED, INCLUDING THE WARRANTIES OF MERCHANTABILITY AND FITNESS.

To take advantage of this warranty, the product or part must be returned to us with transportation charges prepaid. Proof of purchase date and an explanation of the complaint must accompany the merchandise. If our inspection verifies the defect, we will either repair or replace the product at our election or we may elect to refund the purchase price if we cannot readily and quickly provide you with a replacement. We will return repaired products at our expense, but if we determine there is no defect, or that the defect resulted from causes not within the scope of our warranty, then you must bear the cost of returning the product.

This warranty gives you specific legal rights and you may also have other rights which vary from state to state.

PITTSBURGH® AUTOMOTIVE

26677 Agoura Road • Calabasas, CA 91302 • 1-888-866-5797