Owner's Manual & Safety Instructions

Save This Manual Keep this manual for the safety warnings and precautions, assembly, operating, inspection, maintenance and cleaning procedures. Write the product's serial number in the back of the manual near the assembly diagram (or month and year of purchase if product has no number). Keep this manual and the receipt in a safe and dry place for future reference. 19a

Bauer™

19121E-B

1/4" TRIM ROUTER

Visit our website at: http://www.harborfreight.com
Email our technical support at: productsupport@harborfreight.com

64944

When unpacking, make sure that the product is intact and undamaged. If any parts are missing or broken, please call 1-888-866-5797 as soon as possible.

Copyright© 2019 by Harbor Freight Tools®. All rights reserved.
No portion of this manual or any artwork contained herein may be reproduced in any shape or form without the express written consent of Harbor Freight Tools.
Diagrams within this manual may not be drawn proportionally. Due to continuing improvements, actual product may differ slightly from the product described herein. Tools required for assembly and service may not be included.

⚠WARNING

Read this material before using this product. Failure to do so can result in serious injury. SAVE THIS MANUAL.

Table of Contents

Safety 2
Specifications 8
Setup 8
Operation.....9
Maintenance 12
Parts List and Diagram 14
Warranty 16

SAFETY

SETUP

OPERATION

MAINTENANCE

WARNING SYMBOLS AND DEFINITIONS	
⚠	This is the safety alert symbol. It is used to alert you to potential personal injury hazards. Obey all safety messages that follow this symbol to avoid possible injury or death.
⚠ DANGER	Indicates a hazardous situation which, if not avoided, will result in death or serious injury.
⚠ WARNING	Indicates a hazardous situation which, if not avoided, could result in death or serious injury.
⚠ CAUTION	Indicates a hazardous situation which, if not avoided, could result in minor or moderate injury.
NOTICE CAUTION	Addresses practices not related to personal injury.

IMPORTANT SAFETY INFORMATION

General Power Tool Safety Warnings

⚠ WARNING

Read all safety warnings and all instructions.
Failure to follow the warnings and instructions may result in electric shock, fire and/or serious injury.

Save all warnings and instructions for future reference.

The term "power tool" in the warnings refers to your mains-operated (corded) power tool.

Work Area Safety

1. **Keep work area clean and well lit.**
   Cluttered or dark areas invite accidents.
2. **Do not operate power tools in explosive atmospheres, such as in the presence of flammable liquids, gases or dust.** *Power tools create sparks which may ignite the dust or fumes.*
3. **Keep children and bystanders away while operating a power tool.**
   Distractions can cause you to lose control.

Electrical Safety

1. **Power tool plugs must match the outlet. Never modify the plug in any way. Do not use any adapter plugs with grounded power tools.** *Unmodified plugs and matching outlets will reduce risk of electric shock.*

2. **Avoid body contact with grounded surfaces such as pipes, radiators, ranges and refrigerators.** *There is an increased risk of electric shock if your body is grounded.*

3. **Do not expose power tools to rain or wet conditions.** *Water entering a power tool will increase the risk of electric shock.*

4. **Do not abuse the cord. Never use the cord for carrying, pulling or unplugging the power tool. Keep cord away from heat, oil, sharp edges or moving parts.** *Damaged or entangled cords increase the risk of electric shock.*

5. **When operating a power tool outdoors, use an extension cord suitable for outdoor use.** *Use of a cord suitable for outdoor use reduces the risk of electric shock.*

6. **If operating a power tool in a damp location is unavoidable, use a Ground Fault Circuit Interrupter (GFCI) protected supply.** *Use of a GFCI reduces the risk of electric shock.*

Personal Safety

1. **Stay alert, watch what you are doing and use common sense when operating a power tool. Do not use a power tool while you are tired or under the influence of drugs, alcohol or medication.** *A moment of inattention while operating power tools may result in serious personal injury.*

2. **Use personal protective equipment. Always wear eye protection.** Protective *equipment such as dust mask, non-skid safety shoes, hard hat, or hearing protection used for appropriate conditions will reduce personal injuries.*

3. **Prevent unintentional starting. Ensure the Power Switch is in the off-position before connecting to power source, picking up or carrying the tool.** *Carrying power tools with your finger on the Power Switch or energizing power tools that have the Power Switch on invites accidents.*

4. **Remove any adjusting key or wrench before turning the power tool on.** *A wrench or a key left attached to a rotating part of the power tool may result in personal injury.*

5. **Do not overreach. Keep proper footing and balance at all times.** *This enables better control of the power tool in unexpected situations.*

6. **Dress properly. Do not wear loose clothing or jewelry. Keep your hair, clothing and gloves away from moving parts.** *Loose clothes, jewelry or long hair can be caught in moving parts.*

7. **If devices are provided for the connection of dust extraction and collection facilities, ensure these are connected and properly used.** *Use of dust collection can reduce dust-related hazards.*

8. **Only use safety equipment that has been approved by an appropriate standards agency.** *Unapproved safety equipment may not provide adequate protection. Eye protection must be ANSI-approved and breathing protection must be NIOSH-approved for the specific hazards in the work area.*

Power Tool Use and Care

1. **Do not force the power tool. Use the correct power tool for your application.** *The correct power tool will do the job better and safer at the rate for which it was designed.*

2. **Do not use the power tool if the Power Switch does not turn it on and off.** *Any power tool that cannot be controlled with the Power Switch is dangerous and must be repaired.*

3. **Disconnect the plug from the power source before making any adjustments, changing accessories, or storing power tools.** *Such preventive safety measures reduce the risk of starting the power tool accidentally.*

4. **Store idle power tools out of the reach of children and do not allow persons unfamiliar with the power tool or these instructions to operate the power tool.** *Power tools are dangerous in the hands of untrained users.*

5. **Maintain power tools. Check for misalignment or binding of moving parts, breakage of parts and any other condition that may affect the power tool's operation. If damaged, have the power tool repaired before use.** *Many accidents are caused by poorly maintained power tools.*

6. **Keep cutting tools sharp and clean.** *Properly maintained cutting tools with sharp cutting edges are less likely to bind and are easier to control.*

7. **Use the power tool, accessories and tool bits etc. in accordance with these instructions, taking into account the working conditions and the work to be performed.** *Use of the power tool for operations different from those intended could result in a hazardous situation.*

Service

Have your power tool serviced by a qualified repair person using only identical replacement parts. *This will ensure that the safety of the power tool is maintained.*

Router and Trimmer Safety Warnings

1. **Hold power tool by insulated gripping surfaces, because the cutter may contact its own cord.** *Cutting a "live" wire may make exposed metal parts of the power tool "live" and shock the operator.*

2. **Use clamps or another practical way to secure and support the workpiece to a stable platform.** *Holding the work by hand or against your body leaves it unstable and may lead to loss of control.*

3. **Let bit cool before touching, changing or adjusting it. Bits heat up dramatically while in use, and can burn you.**

4. **DO NOT OPERATE WITH THE BASE OR ANY OTHER GUARD DISABLED, DAMAGED, OR REMOVED. Any moving guards must move freely and close instantly.**

5. Maintain labels and nameplates on the tool. These carry important safety information. If unreadable or missing, contact Harbor Freight Tools for a replacement.

6. Avoid unintentional starting. Prepare to begin work before turning on the tool.

7. Do not lay the tool down until it has come to a complete stop. Moving parts can grab the surface and pull the tool out of your control.

8. When using a handheld power tool, maintain a firm grip on the tool with both hands to resist starting torque.

9. Do not depress the spindle lock when starting or during operation.

10. Do not leave the tool unattended when it is plugged into an electrical outlet. Turn off the tool, and unplug it from its electrical outlet before leaving.

11. This product is not a toy. Keep it out of reach of children.

12. People with pacemakers should consult their physician(s) before use. Electromagnetic fields in close proximity to heart pacemaker could cause pacemaker interference or pacemaker failure. In addition, people with pacemakers should:
    - Avoid operating alone.
    - Do not use with Power Switch locked on.
    - Properly maintain and inspect to avoid electrical shock.
    - Properly ground power cord. Ground Fault Circuit Interrupter (GFCI) should also be implemented – it prevents sustained electrical shock.

13. The warnings, precautions, and instructions discussed in this instruction manual cannot cover all possible conditions and situations that may occur. It must be understood by the operator that common sense and caution are factors which cannot be built into this product, but must be supplied by the operator.

Vibration Safety

This tool vibrates during use.
Repeated or long-term exposure to vibration may cause temporary or permanent physical injury, particularly to the hands, arms and shoulders.
To reduce the risk of vibration-related injury:

1. Anyone using vibrating tools regularly or for an extended period should first be examined by a doctor and then have regular medical check-ups to ensure medical problems are not being caused or worsened from use. Pregnant women or people who have impaired blood circulation to the hand, past hand injuries, nervous system disorders, diabetes, or Raynaud's Disease should not use this tool.
   If you feel any symptoms related to vibration (such as tingling, numbness, and white or blue fingers), seek medical advice as soon as possible.
2. Do not smoke during use. Nicotine reduces the blood supply to the hands and fingers, increasing the risk of vibration-related injury.
3. Wear suitable gloves to reduce the vibration effects on the user.
4. Use tools with the lowest vibration when there is a choice.
5. Include vibration-free periods each day of work.
6. Grip tool as lightly as possible (while still keeping safe control of it). Let the tool do the work.
7. To reduce vibration, maintain the tool as explained in this manual. If any abnormal vibration occurs, stop use immediately.

SAVE THESE INSTRUCTIONS.

Grounding

⚠WARNING

TO PREVENT ELECTRIC SHOCK AND DEATH FROM INCORRECT GROUNDING WIRE CONNECTION:
Check with a qualified electrician if you are in doubt as to whether the outlet is properly grounded. Do not modify the power cord plug provided with the tool. Never remove the grounding prong from the plug. Do not use the tool if the power cord or plug is damaged. If damaged, have it repaired by a service facility before use. If the plug will not fit the outlet, have a proper outlet installed by a qualified electrician.

Grounded Tools: Tools with Three Prong Plugs

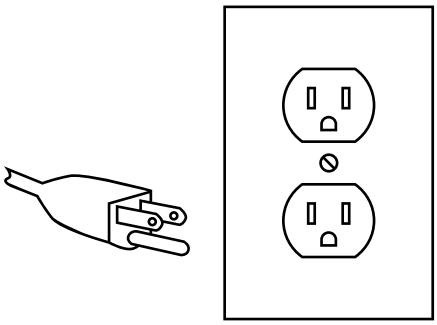

3-Prong Plug and Outlet

1. Tools marked with "Grounding Required" have a three wire cord and three prong grounding plug. The plug must be connected to a properly grounded outlet. If the tool should electrically malfunction or break down, grounding provides a low resistance path to carry electricity away from the user, reducing the risk of electric shock. **(See 3-Prong Plug and Outlet.)**
2. The grounding prong in the plug is connected through the green wire inside the cord to the grounding system in the tool. The green wire in the cord must be the only wire connected to the tool's grounding system and must never be attached to an electrically "live" terminal. **(See 3-Prong Plug and Outlet.)**
3. The tool must be plugged into an appropriate outlet, properly installed and grounded in accordance with all codes and ordinances. The plug and outlet should look like those in the preceding illustration. **(See 3-Prong Plug and Outlet.)**

Double Insulated Tools: Tools with Two Prong Plugs

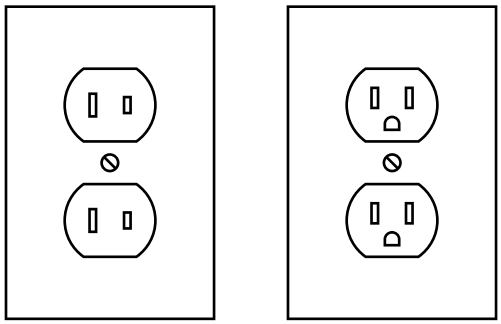

Outlets for 2-Prong Plug

1. Tools marked "Double Insulated" do not require grounding. They have a special double insulation system which satisfies OSHA requirements and complies with the applicable standards of Underwriters Laboratories, Inc., the Canadian Standard Association, and the National Electrical Code.
2. Double insulated tools may be used in either of the 120 volt outlets shown in the preceding illustration. **(See Outlets for 2-Prong Plug.)**

Extension Cords

1. ***Grounded*** tools require a three wire extension cord. ***Double Insulated*** tools can use either a two or three wire extension cord.
2. As the distance from the supply outlet increases, you must use a heavier gauge extension cord. Using extension cords with inadequately sized wire causes a serious drop in voltage, resulting in loss of power and possible tool damage. **(See Table A.)**
3. The smaller the gauge number of the wire, the greater the capacity of the cord. For example, a 14 gauge cord can carry a higher current than a 16 gauge cord. **(See Table A.)**
4. When using more than one extension cord to make up the total length, make sure each cord contains at least the minimum wire size required. **(See Table A.)**
5. If you are using one extension cord for more than one tool, add the nameplate amperes and use the sum to determine the required minimum cord size. **(See Table A.)**
6. If you are using an extension cord outdoors, make sure it is marked with the suffix "W-A" ("W" in Canada) to indicate it is acceptable for outdoor use.
7. Make sure the extension cord is properly wired and in good electrical condition. Always replace a damaged extension cord or have it repaired by a qualified electrician before using it.
8. Protect the extension cords from sharp objects, excessive heat, and damp or wet areas.

TABLE A: RECOMMENDED MINIMUM WIRE GAUGE FOR EXTENSION CORDS* (120/240 VOLT)

NAMEPLATE AMPERES (at full load)	EXTENSION CORD LENGTH				
	25´	50´	75´	100´	150´
0 – 2.0	18	18	18	18	16
2.1 – 3.4	18	18	18	16	14
3.5 – 5.0	18	18	16	14	12
5.1 – 7.0	18	16	14	12	12
7.1 – 12.0	18	14	12	10	-
12.1 – 16.0	14	12	10	-	-
16.1 – 20.0	12	10	-	-	-

*** Based on limiting the line voltage drop to five volts at 150% of the rated amperes.**

Symbology

⧈	Double Insulated
V	Volts
~	Alternating Current
A	Amperes
n_0 xxxx/min.	No Load Revolutions per Minute (RPM)

	WARNING marking concerning Risk of Eye Injury. Wear ANSI-approved safety goggles with side shields.
	Read the manual before set-up and/or use.
	WARNING marking concerning Risk of Fire. Do not cover ventilation ducts. Keep flammable objects away.
	WARNING marking concerning Risk of Electric Shock. Properly connect power cord to appropriate outlet.

Bauer™

Specifications

Electrical Rating	120VAC / 60Hz / 6.5A
No Load Speed	10,000–30,000 RPM
Max. Accessory Diameter	1/4"

Setup - Before Use:

Read the ENTIRE IMPORTANT SAFETY INFORMATION section at the beginning of this manual including all text under subheadings therein before set up or use of this product.

Note: For additional information regarding the parts listed in the following pages, refer to *Parts List and Diagram* on page 14.

Functions

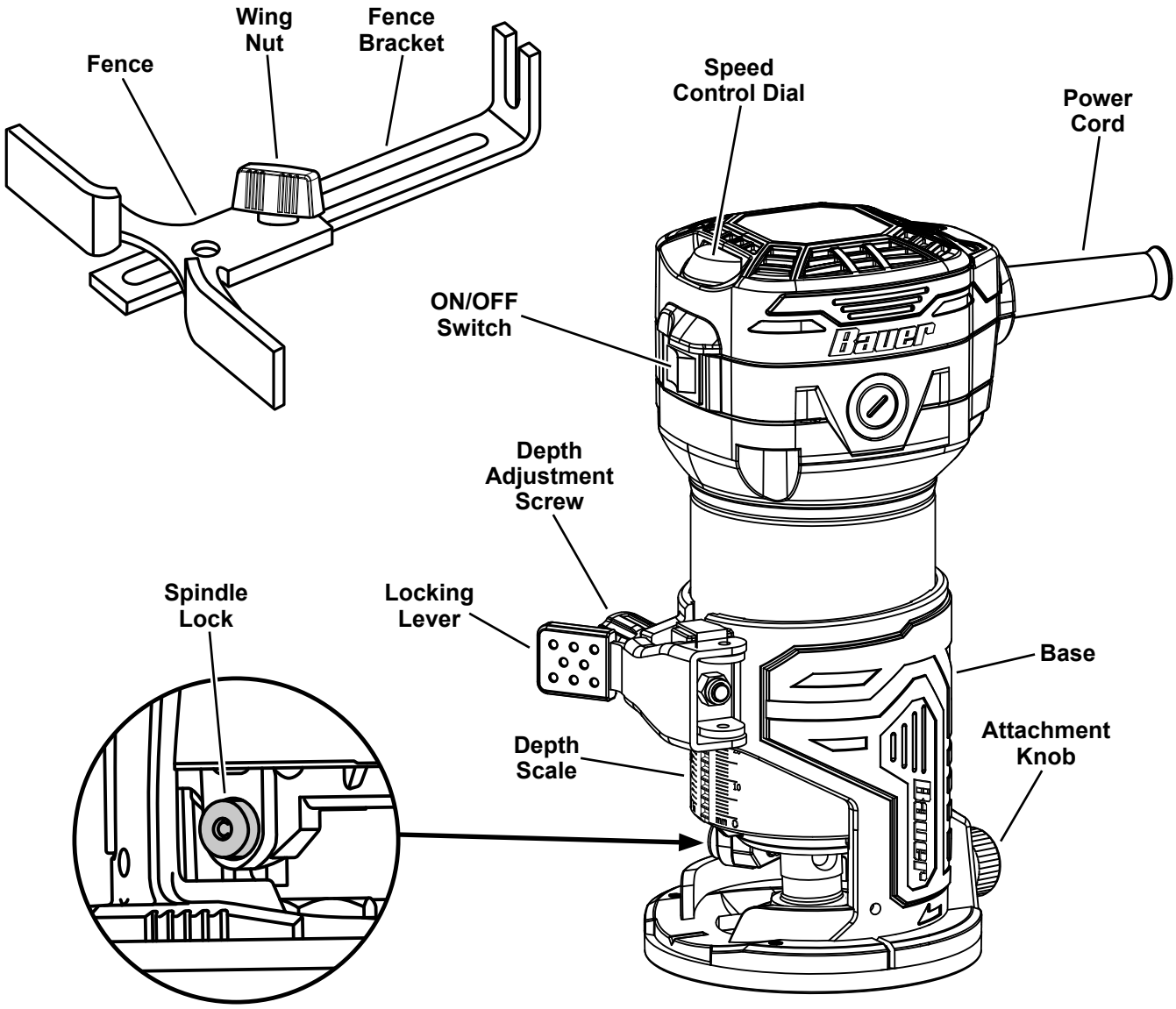

Read the ENTIRE IMPORTANT SAFETY INFORMATION section at the beginning of this manual including all text under subheadings therein before set up or use of this product.

Tool Set Up

WARNING

TO PREVENT SERIOUS INJURY FROM ACCIDENTAL OPERATION:
Make sure that the Power Switch is in the off-position and unplug the tool from its electrical outlet before performing any procedure in this section.

Installing the Router Bit

1. Unplug the Router from the electrical outlet.
2. Release the Locking Lever and use the Depth Adjustment Screw to move the Base down to expose the Collet Nut.
3. Press the Spindle Lock in to keep the Spindle from turning.
4. Using the Large Wrench included, loosen the Collet Nut, but do not remove.
5. If there is already a bit in the Collet Cone, remove it.
6. Push the shank end of the new bit (sold separately) into the opening in the Collet Nut. There may be some resistance, so make sure that it goes in all the way.
7. While holding in the Spindle Lock, tighten the Collet Nut with the Large Wrench.

Adjusting Cutting Depth

Set the depth of cut using the scale marked on the side of the Router.

1. Install the router bit as previously described.
2. Release the Locking Lever and use the Depth Adjustment Screw to move the Base down so the router bit is retracted within the Base.
3. Place the Base on a flat surface, and slide the Router down in the Base until the tip of the bit contacts the work surface. Tighten the Locking Lever.
4. The depth scale on the Housing now shows the starting position. This starting position will vary depending on the bit used.
5. Add the desired depth of cut to the starting position. For example, if the starting position is 1/2" and the desired depth of cut is 1/4", the correct adjustment on the scale is 3/4".
6. Release the Locking Lever, and use the Depth Adjustment Screw to move the Housing up until the scale shows the correct reading; in this example 3/4". Tighten the Locking Lever.
7. Make a test cut on a piece of scrap material to ensure that the adjustment is correct.

Installing the Fence

Use the Fence to make cuts parallel to the edge of a workpiece, or following a guide clamped onto the workpiece.

1. Install the Fence Bracket with the Fence facing inward, and the flanges down.
2. Using the Attachment Knob, attach the Fence Assembly to the Router, as shown in **Figure A**.
3. After measuring the proper distance from the router bit to the Fence, tighten the Fence using the Wing Nut.
4. Adjust the cutting depth as described in *Adjusting Cutting Depth* on page 9.
5. Make a test cut on a piece of scrap material to ensure that the adjustment is correct.

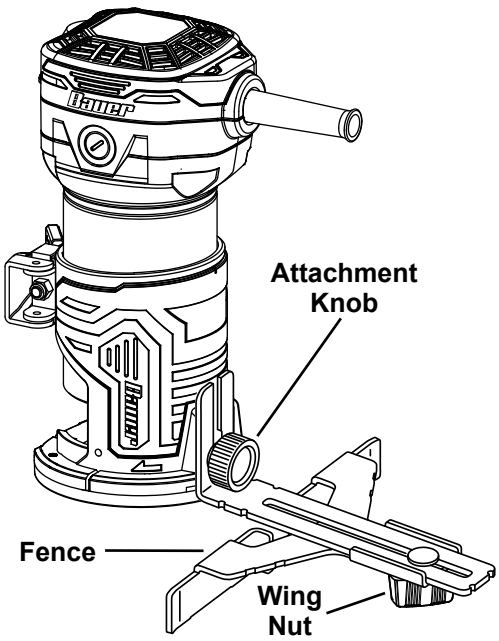

Figure A: Installing the Fence

Setting up a Temporary Guide

Clamp a temporary guide to the workpiece to make a straight cut which does not parallel the edge of the workpiece.

1. Clamp a suitable straight board across the workpiece parallel to the desired location of the cut.
2. Install the Fence Assembly with the Fence facing outward and up, as shown in **Figure B**.
3. After measuring the proper distance from the router bit to the temporary guide, tighten the Fence using the Attachment Knob and Wing Nut.
4. Make a test cut on a piece of scrap material to ensure that the adjustment is correct.

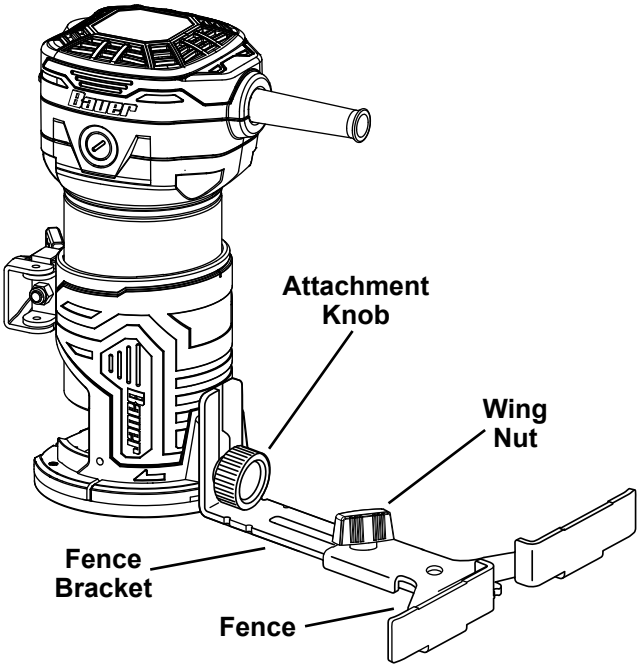

Figure B: Fence Installation for Use with a Temporary Guide

Use the center hole in the Fence as a pivot point when cutting circles.

1. Install the Fence as shown in **Figure C**.
2. Set the distance from the center hole in the Fence to the far edge of the router bit equal to the radius of the circle. Lock the Fence in place with the Attachment Knob and Wing Nut.
3. Align the center hole in the Fence with the center point of the circle.
4. Drive a nail through the center hole to secure the Fence in place.

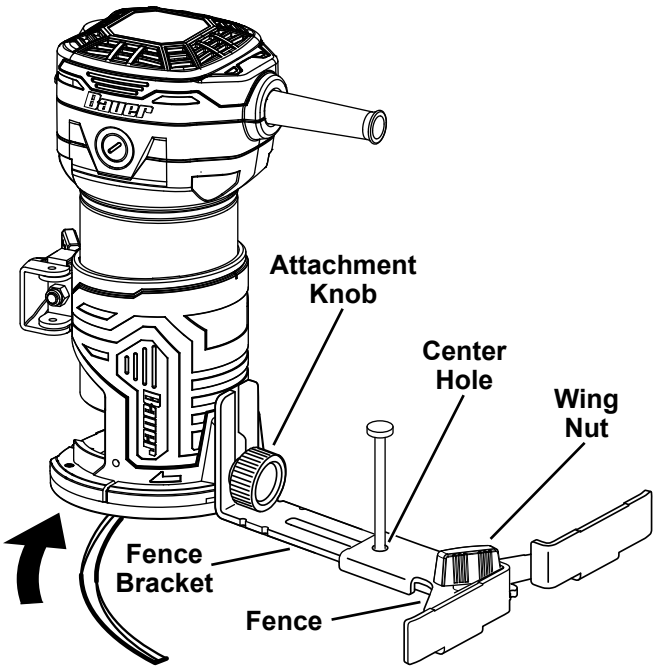

Figure C: Fence Installation for Circle Cutting

Workpiece and Work Area Set Up

1. Designate a work area that is clean and well lit. The work area must not allow access by children or pets to prevent distraction and injury.
2. Route the power cord along a safe route to reach the work area without creating a tripping hazard or exposing the power cord to possible damage. The power cord must reach the work area with enough extra length to allow free movement while working.
3. Secure loose workpieces using a vise or clamps (not included) to prevent movement while working.
4. There must not be objects, such as utility lines, nearby that will present a hazard while working.

General Operating Instructions

1. Make sure that the Power Switch is in the off-position, then plug in the tool.
2. Adjust the Router speed to suit the working material and bit diameter. To adjust speed, turn the Speed Control Knob from 1 (the slowest speed) to 6 (the fastest speed). Determine the optimum speed by testing on a scrap piece of material.
3. Turn the Power Switch on and run the tool for about 10 seconds before routing to ensure that all moving parts are running smoothly, and there are no loose parts, rattles, or sparking that would indicate damage.
4. When using the Fence: Cut parallel to the edge of the workpiece with the Fence following the edge.
5. When using a Temporary Guide: Cut with the Fence following the edge of the temporary guide.
6. When making a Circle Cut: With the nail in place through the center hole of the Fence, plunge the router bit into the workpiece and rotate the Router in a circle around the nail.

Note: The router bit rotates clockwise. Adjust for this while cutting:

a. For most materials it is best to move the Router from left to right as facing the workpiece.
b. When cutting outside edges, move the Router counterclockwise. When cutting inside edges, move the Router clockwise.

7. To prevent accidents, turn off the tool and unplug it after use. Clean, then store the tool indoors out of children's reach.

Procedures not specifically explained in this manual must be performed only by a qualified technician.

WARNING

TO PREVENT SERIOUS INJURY FROM ACCIDENTAL OPERATION:
Make sure that the Power Switch is in the off-position and unplug the tool from its electrical outlet before performing any procedure in this section.

TO PREVENT SERIOUS INJURY FROM TOOL FAILURE:
Do not use damaged equipment. If abnormal noise or vibration occurs, have the problem corrected before further use.

Cleaning, Maintenance, and Lubrication

1. **BEFORE EACH USE,** inspect the general condition of the tool. Check for:
   - loose hardware
   - misalignment or binding of moving parts
   - damaged cord/electrical wiring
   - cracked or broken parts
   - any other condition that may affect its safe operation.
2. **AFTER USE,** wipe external surfaces of the tool with clean cloth.
3. Periodically, wear ANSI-approved safety goggles and NIOSH-approved breathing protection and blow dust out of the motor vents using dry compressed air.
4. Periodically wipe the Collet, Collet Cone, and router bits with a light oil to prevent rust.
5. Over time, if the performance of the tool diminishes, or it stops working completely, it may be necessary to replace the Carbon Brushes.
   This procedure must be completed by a qualified technician.
6. **WARNING! If the supply cord of this power tool is damaged, it must be replaced only by a qualified service technician.**

Troubleshooting

Problem	Possible Causes	Likely Solutions
Tool will not start.	1. Cord not connected. 2. No power at outlet. 3. Tool's thermal reset breaker tripped (if equipped). 4. Internal damage or wear. (Carbon brushes or Power Switch, for example.)	1. Check that cord is plugged in. 2. Check power at outlet. If outlet is unpowered, turn off tool and check circuit breaker. If breaker is tripped, make sure circuit is right capacity for tool and circuit has no other loads. 3. Turn off tool and allow to cool. Press reset button on tool. 4. Have technician service tool.
Tool operates slowly.	1. Forcing tool to work too fast. 2. Extension cord too long or cord diameter too small.	1. Allow tool to work at its own rate. 2. Eliminate use of extension cord. If an extension cord is needed, use one with the proper diameter for its length and load. See *Extension Cords* in *Grounding* section on page 6.
Performance decreases over time.	1. Carbon brushes worn or damaged. 2. Router bit dull or damaged.	1. Have qualified technician replace brushes. 2. Use sharp bits. Replace as needed.
Excessive noise or rattling.	Internal damage or wear. (Carbon brushes or bearings, for example.)	Have technician service tool.
Overheating.	1. Forcing tool to work too fast. 2. Accessory misaligned. 3. Router bit dull or damaged. 4. Blocked motor housing vents. 5. Motor being strained by long or small diameter extension cord.	1. Allow tool to work at its own rate. 2. Check and correct accessory to fence and/or table alignment. 3. Use sharp bits. Replace as needed. 4. Wear ANSI-approved safety goggles and NIOSH-approved dust mask/respirator while blowing dust out of motor using compressed air. 5. Eliminate use of extension cord. If an extension cord is needed, use one with the proper diameter for its length and load. See *Extension Cords* in *Grounding* section on page 6.

Follow all safety precautions whenever diagnosing or servicing the tool.
Disconnect power supply before service.

PLEASE READ THE FOLLOWING CAREFULLY

THE MANUFACTURER AND/OR DISTRIBUTOR HAS PROVIDED THE PARTS LIST AND ASSEMBLY DIAGRAM IN THIS MANUAL AS A REFERENCE TOOL ONLY. NEITHER THE MANUFACTURER OR DISTRIBUTOR MAKES ANY REPRESENTATION OR WARRANTY OF ANY KIND TO THE BUYER THAT HE OR SHE IS QUALIFIED TO MAKE ANY REPAIRS TO THE PRODUCT, OR THAT HE OR SHE IS QUALIFIED TO REPLACE ANY PARTS OF THE PRODUCT. IN FACT, THE MANUFACTURER AND/OR DISTRIBUTOR EXPRESSLY STATES THAT ALL REPAIRS AND PARTS REPLACEMENTS SHOULD BE UNDERTAKEN BY CERTIFIED AND LICENSED TECHNICIANS, AND NOT BY THE BUYER. THE BUYER ASSUMES ALL RISK AND LIABILITY ARISING OUT OF HIS OR HER REPAIRS TO THE ORIGINAL PRODUCT OR REPLACEMENT PARTS THERETO, OR ARISING OUT OF HIS OR HER INSTALLATION OF REPLACEMENT PARTS THERETO.

Parts List

Part	Description	Qty
1	Rating Plate	1
2	Back Cover	1
3	Speed Control	1
4	Terminal Block	1
5	Switch	1
6	Tapping Screw St4.2x13	2
7	Power Cord Clamp	1
8	Power Cord Sleeve	1
9	Power Cord	1
10	Spring	2
11	Brush Holder	2
12	Carbon Brush	2
13	Carbon Brush Cap	2
14	Motor Housing	1
15	Stator	1
16	Circlip	1
17	Magnetic Ring	1
18	Washer 5	2
19	Bearing Sleeve	1
20	Bearing 627-2RZ	1
21	Dustproof Ring	1
22	Rotor	1
23	Circlip	1
24	Bearing 6003-2RZ	1
25	Washer	1
26	Bearing Sleeve	1
27	Sleeve	1

Part	Description	Qty
28	Aluminum Housing	1
29	Tapping Screw St4.2x32	4
30	Rubber Grip	1
31	Nut M5	1
32	Locking Lever	1
33	Lever Cover	1
34	Attachment Knob	1
35	Washer 6	2
36	Base	1
37	Base Plate	1
38	Screw M4x10	4
39	Depth Adjustment Screw	1
40	Bracket	1
41	Pinion Gear	1
42	Cylindrical Pin Φ4x4	1
43	Collet Nut	1
44	Collet	1
45	Spindle Lock Cap	1
46	Spring	1
47	Spindle Lock Pin	1
48	Bolt M6x10	1
49	Fence Bracket	1
50	Fence	1
51	Wing Nut	1
52	Small Wrench	1
53	Large Wrench	1

Record Product's Serial Number Here:_____

Note: If product has no serial number, record month and year of purchase instead.

Note: Some parts are listed and shown for illustration purposes only, and are not available individually as replacement parts.

Assembly Diagram

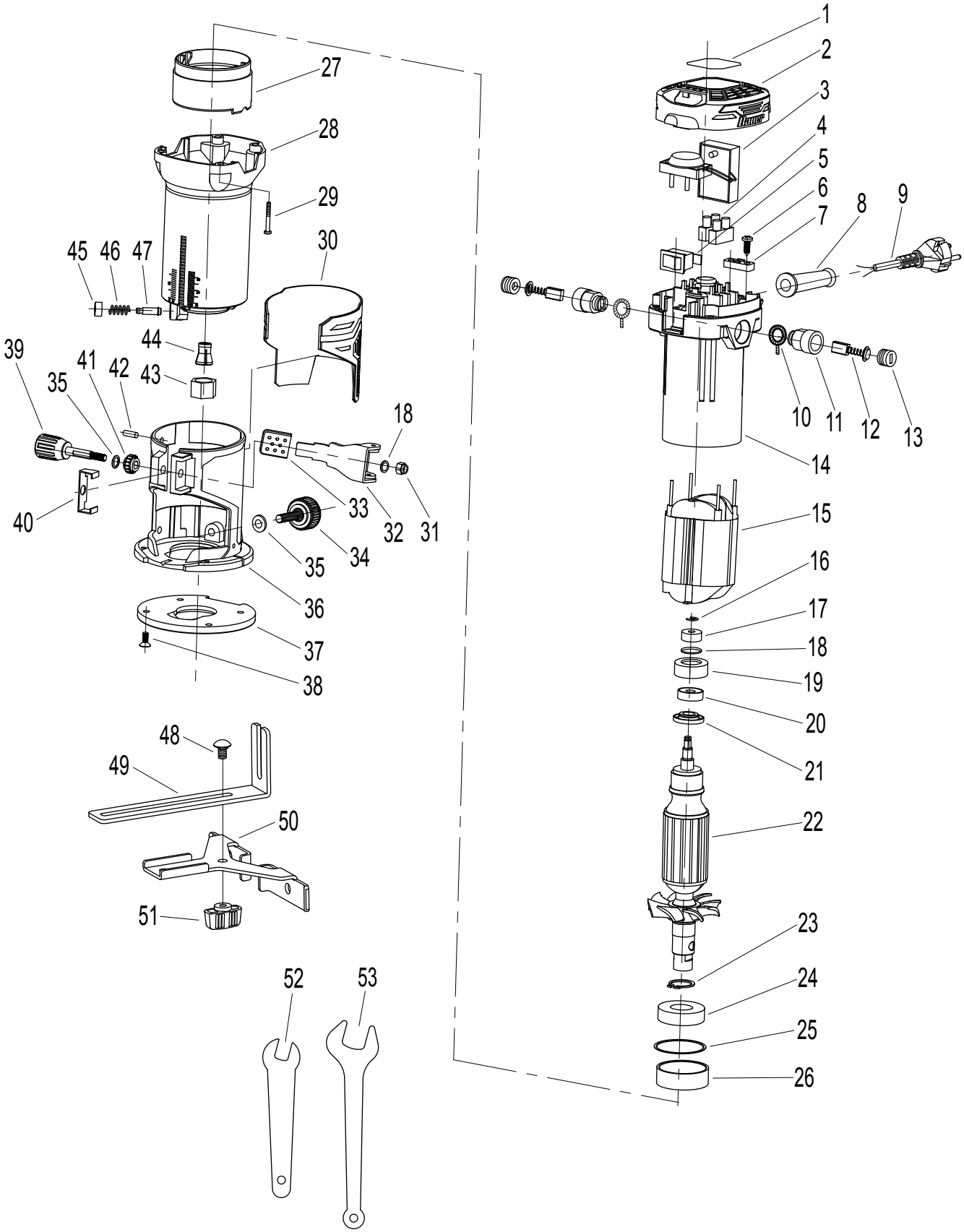

Limited 90 Day Warranty

Harbor Freight Tools Co. makes every effort to assure that its products meet high quality and durability standards, and warrants to the original purchaser that this product is free from defects in materials and workmanship for the period of 90 days from the date of purchase. This warranty does not apply to damage due directly or indirectly, to misuse, abuse, negligence or accidents, repairs or alterations outside our facilities, criminal activity, improper installation, normal wear and tear, or to lack of maintenance. We shall in no event be liable for death, injuries to persons or property, or for incidental, contingent, special or consequential damages arising from the use of our product. Some states do not allow the exclusion or limitation of incidental or consequential damages, so the above limitation of exclusion may not apply to you. THIS WARRANTY IS EXPRESSLY IN LIEU OF ALL OTHER WARRANTIES, EXPRESS OR IMPLIED, INCLUDING THE WARRANTIES OF MERCHANTABILITY AND FITNESS.

To take advantage of this warranty, the product or part must be returned to us with transportation charges prepaid. Proof of purchase date and an explanation of the complaint must accompany the merchandise. If our inspection verifies the defect, we will either repair or replace the product at our election or we may elect to refund the purchase price if we cannot readily and quickly provide you with a replacement. We will return repaired products at our expense, but if we determine there is no defect, or that the defect resulted from causes not within the scope of our warranty, then you must bear the cost of returning the product.

This warranty gives you specific legal rights and you may also have other rights which vary from state to state.

Bauer™

26541 Agoura Road • Calabasas, CA 91302 • 1-888-866-5797