Owner's Manual & Safety Instructions

Save This Manual Keep this manual for the safety warnings and precautions, assembly, operating, inspection, maintenance and cleaning procedures. Write the product's serial number in the back of the manual near the assembly diagram (or month and year of purchase if product has no number). Keep this manual and the receipt in a safe and dry place for future reference. 19b

Bauer™

19115C-B

20V HYPERMAX™ LITHIUM

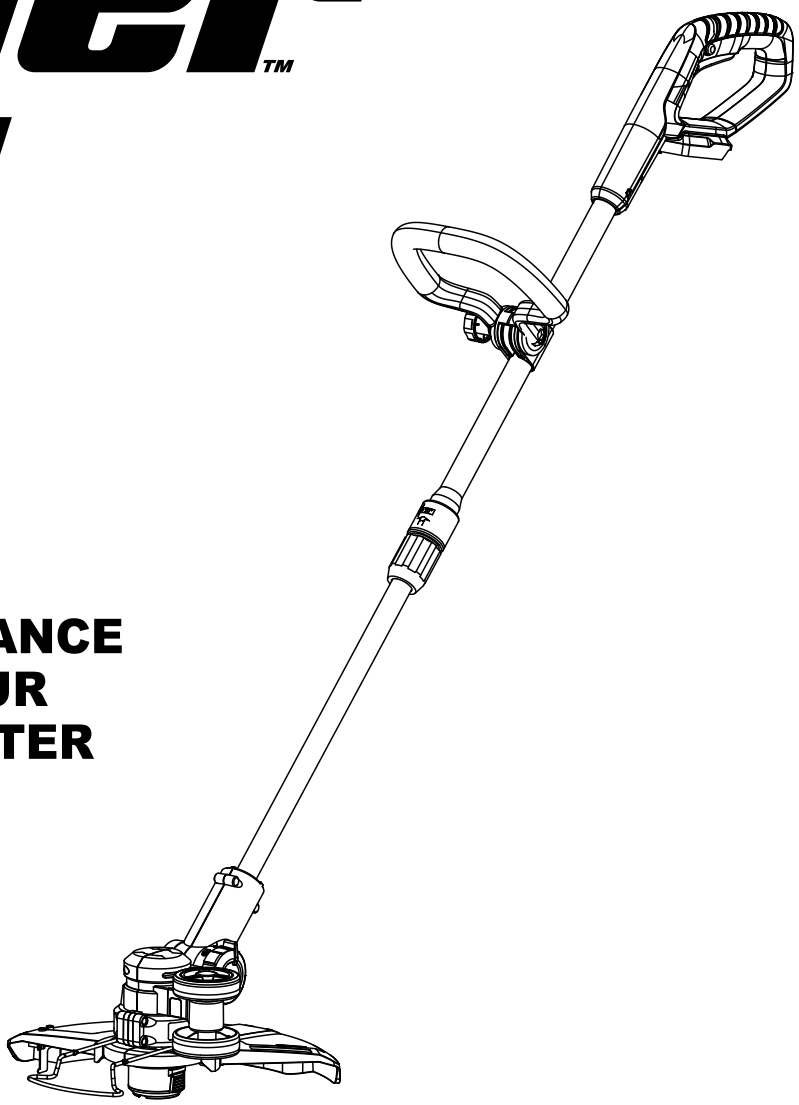

FOR MAX PERFORMANCE USE 3.0 AMP HOUR BATTERY OR GREATER

12" CORDLESS STRING TRIMMER

Visit our website at: http://www.harborfreight.com
Email our technical support at: productsupport@harborfreight.com

64995

When unpacking, make sure that the product is intact and undamaged. If any parts are missing or broken, please call 1-888-866-5797 as soon as possible.

Copyright© 2019 by Harbor Freight Tools®. All rights reserved.
No portion of this manual or any artwork contained herein may be reproduced in any shape or form without the express written consent of Harbor Freight Tools.
Diagrams within this manual may not be drawn proportionally. Due to continuing improvements, actual product may differ slightly from the product described herein. Tools required for assembly and service may not be included.

⚠WARNING

Read this material before using this product. Failure to do so can result in serious injury. SAVE THIS MANUAL.

Table of Contents

Safety 2
Specifications 5
Setup 7
Operation 10
Maintenance 12
Parts List and Diagram 14
Warranty 16

WARNING SYMBOLS AND DEFINITIONS	
⚠	This is the safety alert symbol. It is used to alert you to potential personal injury hazards. Obey all safety messages that follow this symbol to avoid possible injury or death.
⚠DANGER	Indicates a hazardous situation which, if not avoided, will result in death or serious injury.
⚠WARNING	Indicates a hazardous situation which, if not avoided, could result in death or serious injury.
⚠CAUTION	Indicates a hazardous situation which, if not avoided, could result in minor or moderate injury.
NOTICE CAUTION	Addresses practices not related to personal injury.

IMPORTANT SAFETY INFORMATION

General Power Tool Safety Warnings

⚠WARNING

Read all safety warnings and all instructions.
Failure to follow the warnings and instructions may result in electric shock, fire and/or serious injury.

Save all warnings and instructions for future reference.

The term "power tool" in the warnings refers to your battery-operated (cordless) power tool.

Work Area Safety

1. **Keep work area clean and well lit.**
   Cluttered or dark areas invite accidents.
2. **Do not operate power tools in explosive atmospheres, such as in the presence of flammable liquids, gases or dust.** *Power tools create sparks which may ignite the dust or fumes.*
3. **Keep children and bystanders away while operating a power tool.**
   Distractions can cause you to lose control.

Electrical Safety

Do not expose power tools to rain or wet conditions.
Water entering a power tool will increase the risk of electric shock.

Personal Safety

1. **Stay alert, watch what you are doing and use common sense when operating a power tool. Do not use a power tool while you are tired or under the influence of drugs, alcohol or medication.** *A moment of inattention while operating power tools may result in serious personal injury.*
2. **Use personal protective equipment. Always wear eye protection.** Protective *equipment such as dust mask, non-skid safety shoes, hard hat, or hearing protection used for appropriate conditions will reduce personal injuries.*
3. **Prevent unintentional starting. Ensure the Trigger is in the off-position before connecting to power source, picking up or carrying the tool.** *Carrying power tools with your finger on the Trigger or energizing power tools that have the Trigger on invites accidents.*
4. **Do not overreach. Keep proper footing and balance at all times.** *This enables better control of the power tool in unexpected situations.*
5. **Dress properly. Do not wear loose clothing or jewelry. Keep your hair, clothing and gloves away from moving parts.** *Loose clothes, jewelry or long hair can be caught in moving parts.*
6. **If devices are provided for the connection of dust extraction and collection facilities, ensure these are connected and properly used.** *Use of dust collection can reduce dust-related hazards.*
7. **Only use safety equipment that has been approved by an appropriate standards agency.** *Unapproved safety equipment may not provide adequate protection. Eye protection must be ANSI-approved and breathing protection must be NIOSH-approved for the specific hazards in the work area.*

Power Tool Use and Care

1. **Do not force the power tool. Use the correct power tool for your application.** *The correct power tool will do the job better and safer at the rate for which it was designed.*
2. **Do not use the power tool if the Trigger does not turn it on and off.** *Any power tool that cannot be controlled with the Trigger is dangerous and must be repaired.*
3. **Disconnect the battery pack from the power tool before making any adjustments, changing accessories, or storing power tools.** *Such preventive safety measures reduce the risk of starting the power tool accidentally.*
4. **Store idle power tools out of the reach of children and do not allow persons unfamiliar with the power tool or these instructions to operate the power tool.** *Power tools are dangerous in the hands of untrained users.*
5. **Maintain power tools. Check for misalignment or binding of moving parts, breakage of parts and any other condition that may affect the power tool's operation. If damaged, have the power tool repaired before use.** *Many accidents are caused by poorly maintained power tools.*
6. **Keep cutting tools sharp and clean.** *Properly maintained cutting tools with sharp cutting edges are less likely to bind and are easier to control.*
7. **Use the power tool, accessories and tool bits etc. in accordance with these instructions, taking into account the working conditions and the work to be performed.** *Use of the power tool for operations different from those intended could result in a hazardous situation.*

Battery Tool Use and Care

1. **Recharge only with the charger specified by the manufacturer.** *A charger that is suitable for one type of battery pack may create a risk of fire when used with another battery pack.*
2. **Use power tools only with specifically designated battery packs.** *Use of any other battery packs may create a risk of injury and fire.*
3. **When battery pack is not in use, keep it away from other metal objects, like paper clips, coins, keys, nails, screws or other small metal objects, that can make a connection from one terminal to another.** *Shorting the battery terminals together may cause burns or a fire.*
4. **Under abusive conditions, liquid may be ejected from the battery; avoid contact. If contact accidentally occurs, flush with water. If liquid contacts eyes, additionally seek medical help.** *Liquid ejected from the battery may cause irritation or burns.*

Service

Have your power tool serviced by a qualified repair person using only identical replacement parts.
This will ensure that the safety of the power tool is maintained.

String Trimmer Safety

1. **Use both hands when operating the String Trimmer. Using one hand could cause loss of control and result in serious personal injury.**
2. Do not expose to rain.
3. Dress Properly. Do not wear loose clothing or jewelry. They can be caught in moving parts. Use of rubber gloves and substantial footwear is recommended when working outdoors. Wear protective hair covering to contain long hair.
4.  Wear ANSI-approved safety goggles and heavy-duty work gloves. Use face or dust mask if operation is dusty.
5. Do not leave the tool unattended when the Battery Pack is connected. Turn off the tool, and remove the Battery Pack before leaving.
6. Carefully inspect the spool housing and guard before inserting Battery Pack in the Trimmer. Do not use Trimmer if any part is cracked or damaged.
7. The Trigger and Safety Switch are important safety devices. Do not disable or tie down either Trigger or Safety Switch.
8. Do not use in rain, snow, sprinklers, or wet grass. Do not rinse off the Trimmer.
9. Use only during daylight hours.
10. The spool will continue to rotate for a few seconds after use. Allow it to stop completely and remove Battery Pack before putting the tool down, making any adjustments, or servicing the tool.
11. Do not overreach. Keep proper footing and balance at all times.
12. Stay Alert. Watch what you are doing. Use common sense. Do not operate tool when you are tired.
13. Avoid unintentional starting. Prepare to begin work before turning on the tool.
14.  The battery Charger gets hot during use. The Charger's heat can build up to unsafe levels and create a fire hazard if it does not receive adequate ventilation, due to an electrical fault, or if it is used in a hot environment.
    Do not place the Charger on a flammable surface.
    Do not obstruct any vents on the Charger.
    Especially avoid placing the Charger on carpets and rugs; they are not only flammable, but they also obstruct vents under the Charger.
    Place the Charger on a stable, solid, nonflammable surface (such as a stable metal workbench or concrete floor) at least 1 foot away from all flammable objects, such as drapes or walls. Keep a fire extinguisher and a smoke detector in the area. Frequently monitor the Charger and Battery Pack while charging.
15. This product is not a toy. Keep it out of reach of children.
16. People with pacemakers should consult their physician(s) before use. Electromagnetic fields in close proximity to heart pacemaker could cause pacemaker interference or pacemaker failure.
17. Maintain labels and nameplates on the tool. These carry important safety information. If unreadable or missing, contact Harbor Freight Tools for a replacement.
18. The warnings, precautions, and instructions discussed in this instruction manual cannot cover all possible conditions and situations that may occur. It must be understood by the operator that common sense and caution are factors which cannot be built into this product, but must be supplied by the operator.

Lithium Battery Safety Warnings



LITHIUM BATTERIES STORE A LARGE AMOUNT OF ENERGY AND WILL VENT FIRE OR EXPLODE IF MISTREATED:



1. **Keep Battery Pack dry.**
2. **DO NOT DO ANY OF THE FOLLOWING TO THE BATTERY PACK:**
   a. **Open,**
   b. **Drop,**
   c. **Short-circuit,**
   d. **Puncture,**
   e. **Incinerate, or**
   f. **Expose to temperatures greater than 104°F.**
3. Charge Battery Pack only according to its Charger's instructions.
4. Inspect Battery Pack before every use; do not use or charge if damaged.

Battery Charger Safety

1. SAVE THESE INSTRUCTIONS–This manual contains important safety and operating instruction for Battery Charger Model 64995.
2. Before using Battery Charger, read all instructions and cautionary markings on Battery Charger, Battery, and product using Battery.
3. CAUTION - To reduce risk of injury, charge only li-ion Bauer-type rechargeable batteries. Other types of batteries may burst causing personal injury and damage.
4. Do not charge or use tool in rain, or in wet locations
5. Do not use battery-operated tool in rain.
6. Remove or disconnect battery after use, before servicing, cleaning or removing material from the tool.
7. Do not dispose of battery in a fire. The cell may explode. Check with local codes for possible disposal instructions.
8. Do not open or mutilate the battery. Released electrolyte is corrosive and may cause damage to the eyes or skin. It may be toxic if swallowed.
9. Exercise care in handling batteries in order not to short the battery with conducting materials such as rings, bracelets, and keys. The battery or conductor may overheat and cause burns.

Vibration Hazard

This tool vibrates during use. Repeated or long-term exposure to vibration may cause temporary or permanent physical injury, particularly to the hands, arms and shoulders. To reduce the risk of vibration-related injury:

1. Anyone using vibrating appliances regularly or for an extended period should first be examined by a doctor and then have regular medical check-ups to ensure medical problems are not being caused or worsened from use. Pregnant women or people who have impaired blood circulation to the hand, past hand injuries, nervous system disorders, diabetes, or Raynaud's Disease should not use this tool. If you feel any symptoms related to vibration (such as tingling, numbness, and white or blue fingers), seek medical advice as soon as possible.
2. Do not smoke during use. Nicotine reduces the blood supply to the hands and fingers, increasing the risk of vibration-related injury.
3. Wear suitable gloves to reduce the vibration effects on the user.
4. Use appliances with the lowest vibration when there is a choice between different processes.
5. Include vibration-free periods each day of work.
6. Grip tool as lightly as possible (while still keeping safe control of it). Let the tool do the work.
7. To reduce vibration, maintain the tool as explained in this manual. If any abnormal vibration occurs, stop use immediately.



SAVE THESE INSTRUCTIONS.

Grounding

⚠WARNING



TO PREVENT ELECTRIC SHOCK AND DEATH FROM INCORRECT GROUNDING:
Check with a qualified electrician if you are in doubt as to whether the outlet is properly grounded. Do not modify the power cord plug provided with the charger. Do not use the charger if the power cord or plug is damaged. If damaged, have it repaired by a service facility before use. If the plug will not fit the outlet, have a proper outlet installed by a qualified electrician.

Extension Cords

Note: Extension cords must not be used with this item's Charger.

Symbology

	Double Insulated
V	Volts
~	Alternating Current
A	Amperes
n_0 xxxx/min.	No Load Revolutions per Minute (RPM)
	WARNING marking concerning Risk of Eye Injury. Wear ANSI-approved safety goggles with side shields.

	Read the manual before set-up and/or use.
	WARNING marking concerning Risk of Fire. Do not cover Charger ventilation ducts. Charge on fireproof surface only.
	WARNING marking concerning Risk of Electric Shock. Properly connect Charger's power cord to appropriate outlet.
	WARNING marking concerning Risk of Explosion. Do not puncture, short, or open battery packs and do not charge damaged battery packs.

Specifications

Battery Type	20V Bauer Li-Ion
No Load Speed	8100 RPM
Replacement Line Type	0.065" Nylon

Read the ENTIRE IMPORTANT SAFETY INFORMATION section at the beginning of this manual including all text under subheadings therein before set up or use of this product.

Functions

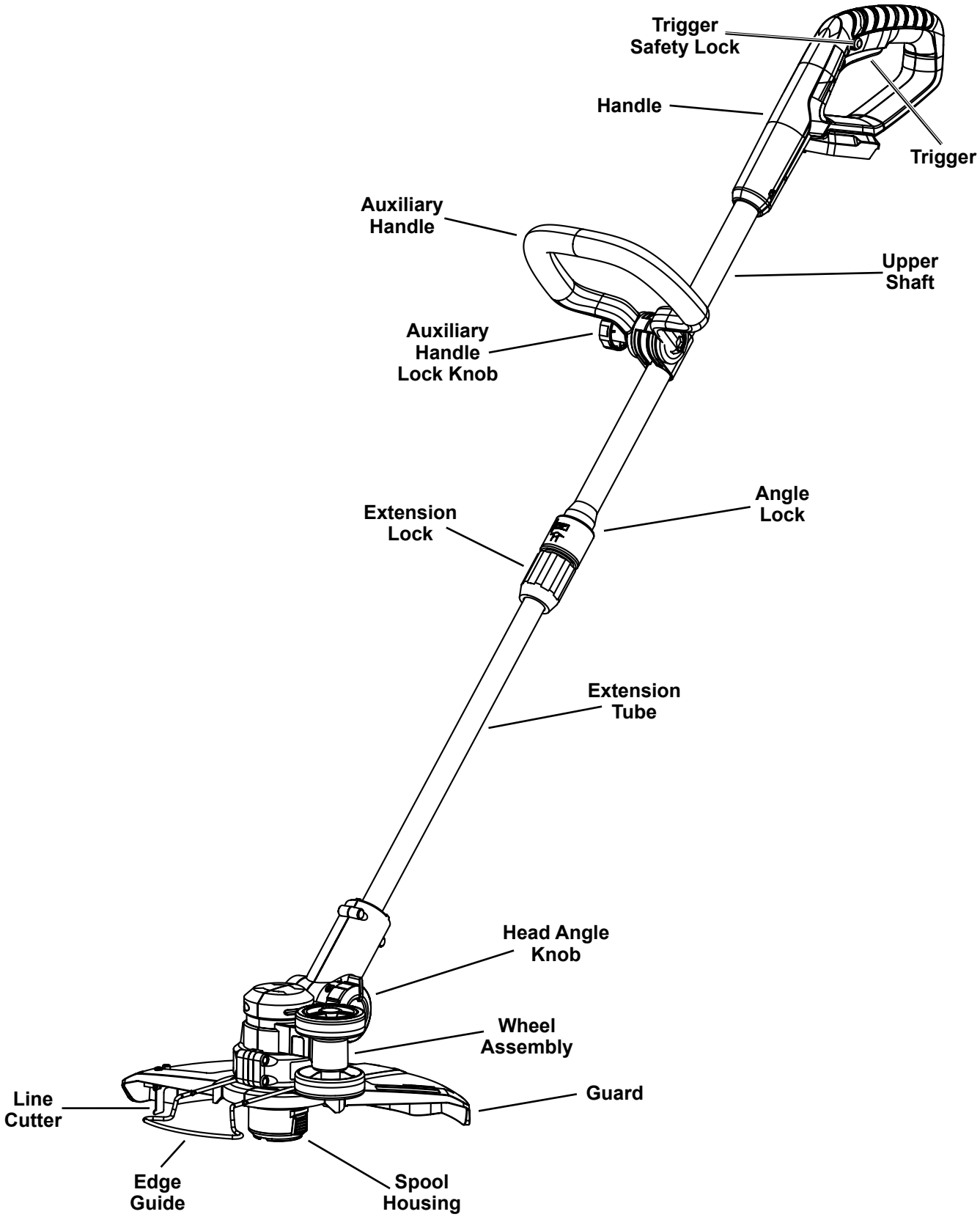

Assembly

⚠WARNING

TO PREVENT SERIOUS INJURY FROM ACCIDENTAL OPERATION: Make sure that the Trigger is in the off-position and remove the Battery Pack before performing any procedure in this section.

Note: For additional information regarding the parts listed in the following pages, refer to the Assembly Diagram near the end of this manual.

Installing Guard

WARNING! TO PREVENT SERIOUS INJURY FROM FLYING DEBRIS AND PIECES OF TRIMMING LINE: Install the guard only in the orientation shown.

1. Align the Guard with the bottom of the Trimmer Head as shown in Figure A. Slide the tabs on the Guard into the slots on the bottom of the Trimmer Head.

2. Turn the Trimmer upside down and secure the Guard to the Trimmer Head using the Attachment Screw provided. Do not overtighten.

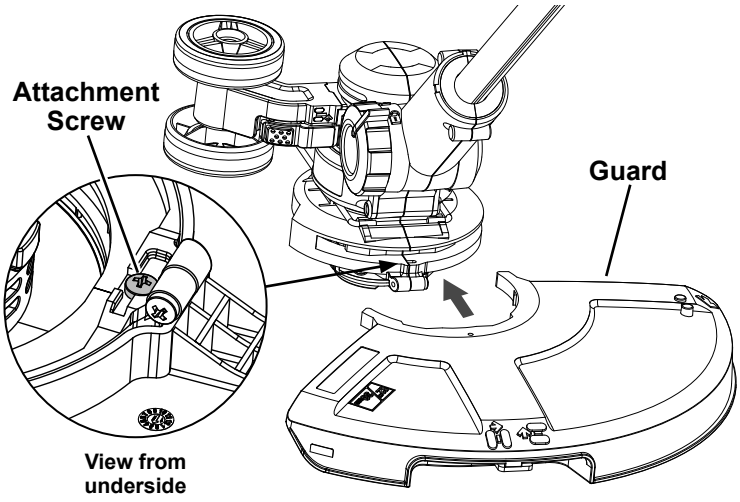

Figure A

Installing Wheel Assembly

The Wheel Assembly may be installed in one of three optional positions to use the tool for forward and reverse trimming, side to side trimming, or edging procedures.

Edger Wheel Setup

1. Slide the Wheel Assembly down onto the Metal Plate located on the side of the Trimmer Head. Make sure the Wheel Assembly locks onto the Plate–it will click into place when properly installed.

2. Remove the Wheel Assembly by pushing in on the Tab and pulling up on the Wheels.

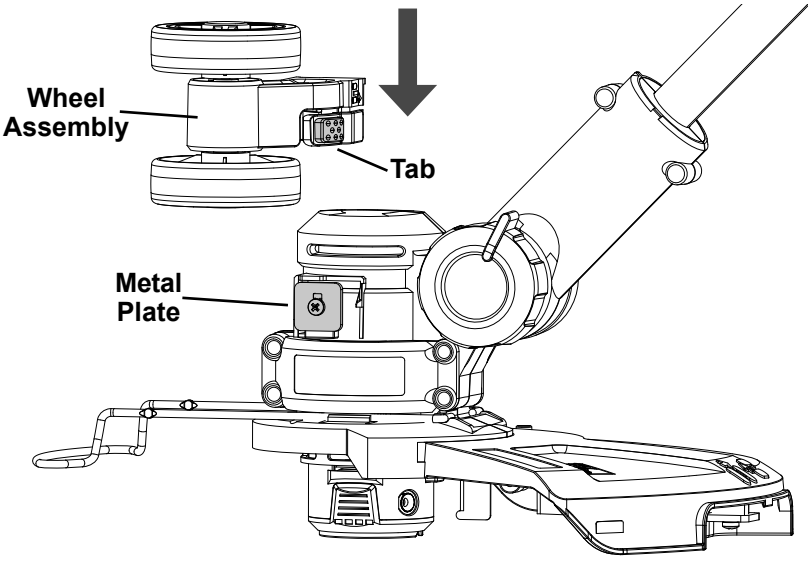

Figure B

Forward and Reverse Trimming Wheel Setup

1. Turn the Trimmer upside down. Slide the Wheel Assembly horizontally with wheels facing forward onto the Metal Plate located on the underside of the Guard. Make sure the Wheel Assembly locks onto the Plate–it will click into place when properly installed.

2. Remove the Wheel Assembly by pushing in on the Tab and pulling Wheels away from the Metal Plate.

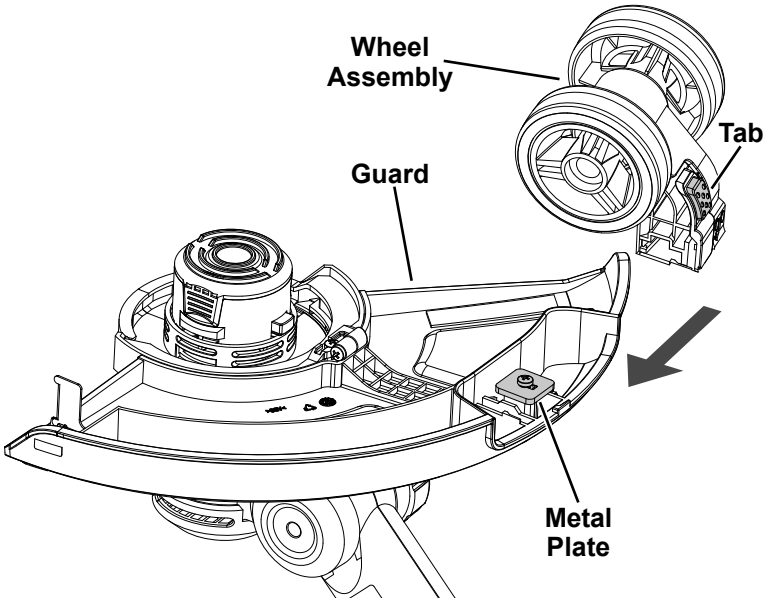

Figure C

Side to Side Trimming Wheel Setup

1. Turn the Trimmer upside down. Slide the Wheel Assembly vertically with wheels facing sideways onto the Metal Plate located on the underside of the Guard. Make sure the Wheel Assembly locks onto the Plate–it will click into place when properly installed.

2. Remove the Wheel Assembly by pushing in on the Tab and pulling Wheels away from the Metal Plate.

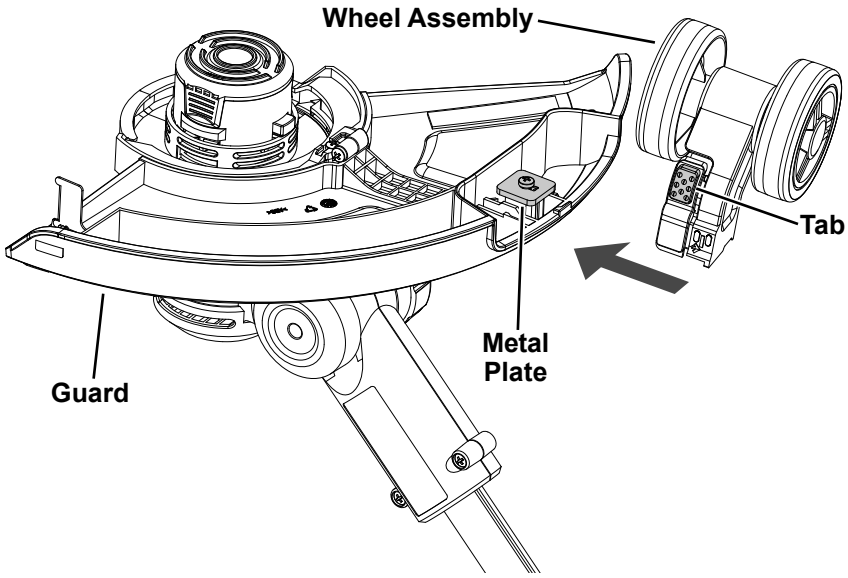

Figure D

Read the ENTIRE IMPORTANT SAFETY INFORMATION section at the beginning of this manual including all text under subheadings therein before set up or use of this product.

⚠WARNING



TO PREVENT SERIOUS INJURY:
Before operating the tool, put on safety goggles, closed-toe work boots, long pants, and other safety gear.

TO PREVENT SERIOUS INJURY AND PROPERTY DAMAGE:
Inspect the area before using the String Trimmer. Remove all hard objects from work area.
Use both hands when operating Trimmer.

TO PREVENT SERIOUS INJURY FROM ACCIDENTAL OPERATION:
Make sure that the Trigger is in the off-position and remove Battery Pack before setting up the tool.

Charging Battery Pack

Charge Battery Pack according to the instructions included with the 20V Bauer Battery Charger (both sold separately).

Automatic Line Feeder

NOTICE: To prevent damage to Trimmer, DO NOT BUMP SPOOL HOUSING ON GROUND. This string trimmer feeds Line automatically when stopping and restarting.

1. With Trimmer running, release Trigger and allow Trimmer to stop fully, then press Trigger Safety Lock and Trigger to restart. Line will be fed out and cut to proper length by Line Cutter.
2. If Trimmer is not cutting correctly, Spool may be tangled. Remove Spool and rewind Line.
3. To advance Line by hand, push Line Outlet Button on Spool Housing and pull out Line at the same time. Approximately 1/4" of Line can be pulled out each time the button is pushed.

Trimmer Operation

1. Remove Battery Pack.
2. Adjust Auxiliary Handle as necessary. Loosen Auxiliary Handle Lock Knob and move Handle to desired position. Tighten Lock Knob securely after adjustment.
3. Adjust length as necessary by turning Extension Lock clockwise, pulling Extension Tube out to desired length, then turning Extension Lock counterclockwise securely.
4. Adjust head angle by rotating the Head Angle Knob to the unlock position, moving head until desired angle is achieved, then rotating Head Angle Knob back to the lock position.
5. Pull Edge Guide out until it locks into place.
6. If using Wheel Assembly for trimming refer to *Installing Wheel Assembly* on page 8.
7. Install fully charged Battery Pack.
8. Put on safety goggles.

NOTICE: To prevent damage to tool or property, avoid contact with fences, trees, shrubs and the like.

9. Holding Trimmer with both hands, press Trigger Safety Lock, then press Trigger.
10. **DO NOT REST TRIMMER ON GROUND.**
11. Do not force the Trimmer. Use the tip of the Line to do the cutting.
12. Release Trigger when done.
13. When finished, to prevent accidents:
    - Remove Battery Pack.
    - Wipe external surfaces of the tool with clean cloth. Store in a dry, indoor area out of reach of children.

Edger Operation

1. Remove Battery Pack.
2. Place the Wheel Assembly in the proper position for edging operation. Refer to *Edger Wheel Setup* on page 8.
3. Pull up on the Angle Lock, rotate Handle/ Upper Shaft clockwise 90° and release Angle Lock. The Upper Shaft will click into place.
4. Adjust Auxiliary Handle as necessary. Loosen Auxiliary Handle Lock Knob and move Handle to desired position. Tighten Lock Knob securely after adjustment.
5. Adjust length as necessary by turning Extension Lock clockwise, pulling Extension Tube out to desired length, then turning Extension Lock counterclockwise securely.
6. Adjust head angle by rotating the Head Angle Knob to the unlock position, moving head until desired angle is achieved, then rotating Head Angle Knob back to the lock position.
7. Install fully charged Battery Pack.
8. Put on safety goggles.

NOTICE: To prevent damage to tool or property, avoid contact with fences, trees, shrubs and the like.

9. Rest Trimmer on Wheel Assembly.
10. Holding Trimmer with both hands, press Trigger Safety Lock, then press Trigger.
11. Do not force the Trimmer. Use the tip of the Line to do the cutting.
12. Release Trigger when done.
13. When finished, to prevent accidents:
    - Remove Battery Pack.
    - Wipe external surfaces of the tool with clean cloth. Store in a dry, indoor area out of reach of children.

Procedures not specifically explained in this manual must be performed only by a qualified technician.

⚠WARNING

TO PREVENT SERIOUS INJURY FROM ACCIDENTAL OPERATION OR ELECTRIC SHOCK:
Release the Trigger and remove the Battery Pack before performing any inspection, maintenance, or cleaning procedures.

TO PREVENT SERIOUS INJURY FROM TOOL FAILURE:
Do not use damaged equipment. If abnormal noise or vibration occurs, have the problem corrected before further use.

Cleaning, Maintenance, and Lubrication

1. **BEFORE EACH USE,** inspect the general condition of the tool. Check for:
   - loose hardware
   - misalignment or binding of moving parts
   - cracked or broken parts
   - damaged electrical wiring
   - any other condition that may affect its safe operation.
2. **AFTER USE,** Remove Battery Pack and wipe external surfaces of the tool with clean cloth.
3. Li-Ion BATTERY MUST BE RECYCLED OR DISPOSED OF PROPERLY.
   Do not short, incinerate or open battery.
4. Store Battery Pack, Charger, and tool in dry, indoor area out of reach of children and away from metal objects (i.e., paperclips, coins) to prevent shorting.
5. All parts are permanently lubricated.
   Do not use additional lubrication.

Replacing Nylon Line

⚠WARNING

TO PREVENT SERIOUS INJURY:
Only replace the line on this tool with the line material and diameter of line listed on the Specifications table. Other materials, such as wire, rope, or blades can damage the tool and be forcefully and dangerously ejected from the tool upon breaking.

1. Remove Battery Pack.
2. Press tabs on Spool Cover, remove Spool Cover, then remove Spool from Spool Housing.
3. Remove old line from Spool.
4. Clean interior of Spool Housing with soft cloth.

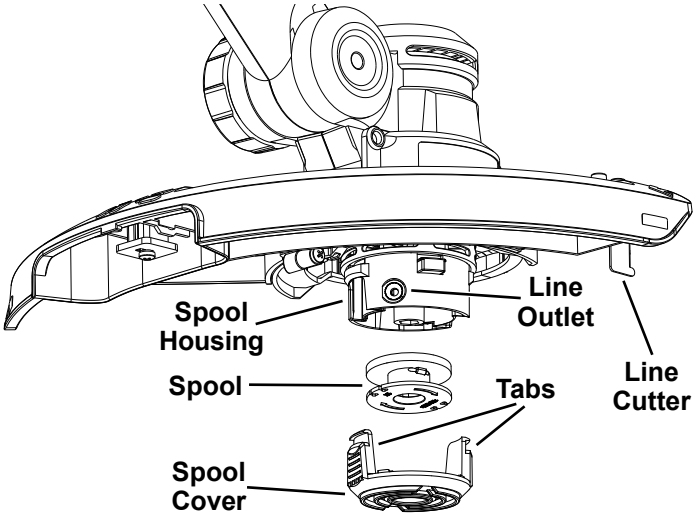

5. Insert end of Nylon Line (up to 10 feet) into Line Insertion Hole.
6. Wrap Line onto Spool in neat, straight rows, under tension, following arrow direction on top of Spool.

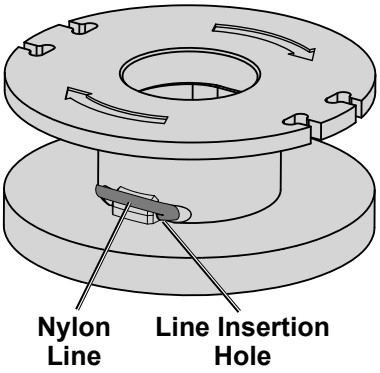

7. Replace Spool, insert Line through Line Outlet in Spool Housing and pull line out past Line Cutter.
8. Replace Spool Cover.

PLEASE READ THE FOLLOWING CAREFULLY

THE MANUFACTURER AND/OR DISTRIBUTOR HAS PROVIDED THE PARTS LIST AND ASSEMBLY DIAGRAM IN THIS MANUAL AS A REFERENCE TOOL ONLY. NEITHER THE MANUFACTURER OR DISTRIBUTOR MAKES ANY REPRESENTATION OR WARRANTY OF ANY KIND TO THE BUYER THAT HE OR SHE IS QUALIFIED TO MAKE ANY REPAIRS TO THE PRODUCT, OR THAT HE OR SHE IS QUALIFIED TO REPLACE ANY PARTS OF THE PRODUCT. IN FACT, THE MANUFACTURER AND/OR DISTRIBUTOR EXPRESSLY STATES THAT ALL REPAIRS AND PARTS REPLACEMENTS SHOULD BE UNDERTAKEN BY CERTIFIED AND LICENSED TECHNICIANS, AND NOT BY THE BUYER. THE BUYER ASSUMES ALL RISK AND LIABILITY ARISING OUT OF HIS OR HER REPAIRS TO THE ORIGINAL PRODUCT OR REPLACEMENT PARTS THERETO, OR ARISING OUT OF HIS OR HER INSTALLATION OF REPLACEMENT PARTS THERETO.

Parts List

Part	Description	Qty
1	Left Handle	1
2	Right Handle	1
3	Trigger	1
4	Compression Spring	1
5	Switch	1
6	Compression Spring	1
7	Trigger Safety Lock	1
8	Terminal	1
9	PCM	1
10	Handle Cover	1
11	Aluminum Tube	1
12	Nut	1
13	Auxiliary Handle Lock Knob	1
14	Auxiliary Handle Bracket	1
15	Slide Gear	2
16	Auxiliary Handle	1
17	Bolt	1
18	Coiled Cable	1
19	Right Rotary Joint	1
20	Right Liner Sleeve Bushing	1
21	Left Liner Sleeve Bushing	1
22	Left Rotary Joint	1
23	Lock Ring	1
24	Compression Spring	1
25	Cover	1
26	Left Motor Housing	1
27	Spring Plate	1
28	Head Angle Knob	1

Part	Description	Qty
29	Right Motor Housing	1
30	Right Motor Housing Cover	1
31	Self-Tapping Screw ST2.9x23	2
32	Left Motor Housing Cover	1
33	Clamping Plate	2
34	Spring Washer 4.1x0.8x1.2	2
35	Line Cutter	1
36	Self-Tapping Screw ST3.9x13	1
37	Guard	1
38	Motor	1
39	Motor Connection Shaft	1
40	Motor Base	1
41	Screw 4x10	2
42	Line Outlet Button	1
43	Compression Spring	1
44	Spool Housing	1
45	Nut	1
46	Line Spool	1
47	Nylon Line	1
48	Spool Cover	1
49	Retaining Ring	2
50	Edger Wheel	2
51	Cylinder Pin	1
52	Edger Wheel Bracket	1
53	Edge Guide	1
54	Self-Tapping Screw ST3.9x16	20
55	Self-Tapping Screw	1
56	Nut	1

Record Product's Serial Number Here:_____

Note: If product has no serial number, record month and year of purchase instead.

Note: Some parts are listed and shown for illustration purposes only, and are not available individually as replacement parts.

Assembly Diagram

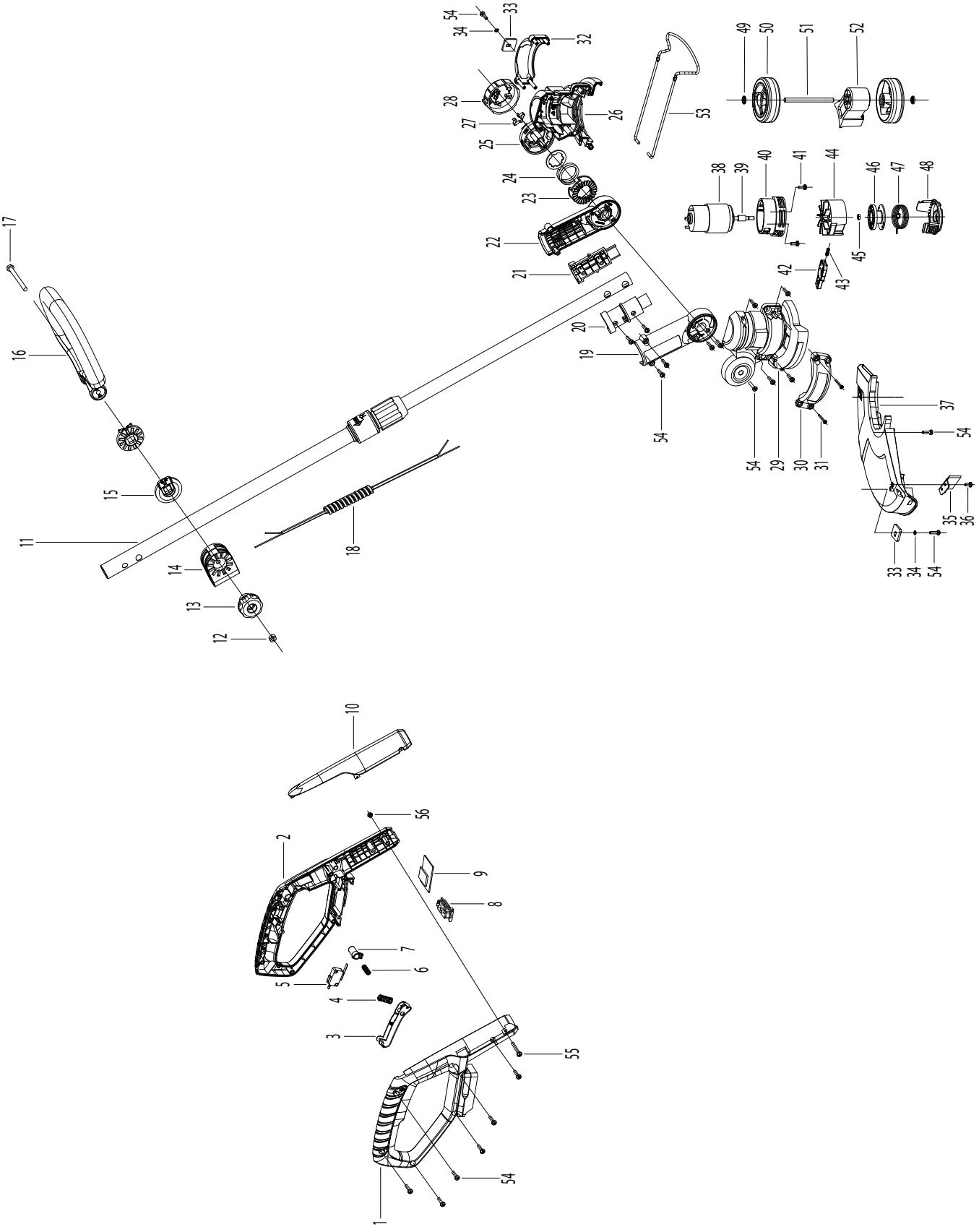

Limited 90 Day Warranty

Harbor Freight Tools Co. makes every effort to assure that its products meet high quality and durability standards, and warrants to the original purchaser that this product is free from defects in materials and workmanship for the period of 90 days from the date of purchase. This warranty does not apply to damage due directly or indirectly, to misuse, abuse, negligence or accidents, repairs or alterations outside our facilities, criminal activity, improper installation, normal wear and tear, or to lack of maintenance. We shall in no event be liable for death, injuries to persons or property, or for incidental, contingent, special or consequential damages arising from the use of our product. Some states do not allow the exclusion or limitation of incidental or consequential damages, so the above limitation of exclusion may not apply to you. THIS WARRANTY IS EXPRESSLY IN LIEU OF ALL OTHER WARRANTIES, EXPRESS OR IMPLIED, INCLUDING THE WARRANTIES OF MERCHANTABILITY AND FITNESS.

To take advantage of this warranty, the product or part must be returned to us with transportation charges prepaid. Proof of purchase date and an explanation of the complaint must accompany the merchandise. If our inspection verifies the defect, we will either repair or replace the product at our election or we may elect to refund the purchase price if we cannot readily and quickly provide you with a replacement. We will return repaired products at our expense, but if we determine there is no defect, or that the defect resulted from causes not within the scope of our warranty, then you must bear the cost of returning the product.

This warranty gives you specific legal rights and you may also have other rights which vary from state to state.

Bauer™

26541 Agoura Road • Calabasas, CA 91302 • 1-888-866-5797