Owner's Manual & Safety Instructions

Save This Manual Keep this manual for the safety warnings and precautions, assembly, operating, inspection, maintenance and cleaning procedures. Write the product's serial number in the back of the manual (or month and year of purchase if product has no number). Keep this manual and the receipt in a safe and dry place for future reference.

24a

PREDATOR®

3500 WATT PORTABLE INVERTER GENERATOR

3000 RUNNING WATTS
3500 MAX STARTING WATTS

Visit our website at: http://www.harborfreight.com
Email our technical support at: productsupport@harborfreight.com
Email our engine support at: predator@harborfreight.com

71358

⚠ DANGER

Using a generator indoors CAN KILL YOU IN MINUTES.

Generator exhaust contains carbon monoxide. This is a poison you cannot see or smell.

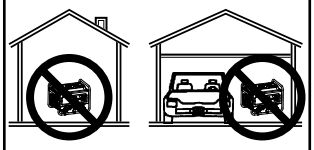

NEVER use inside a home or garage, EVEN IF doors and windows are open.

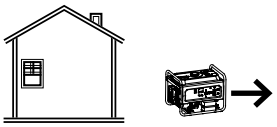

Only use OUTSIDE and far away from windows, doors, and vents.

⚠ DANGER

Do not use in trailers, truck beds, or tents.

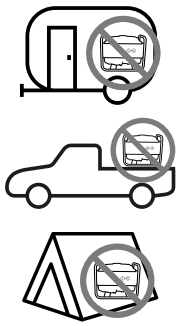

Use at least 20 feet away from people, animals, and structures with exhaust pointed away.

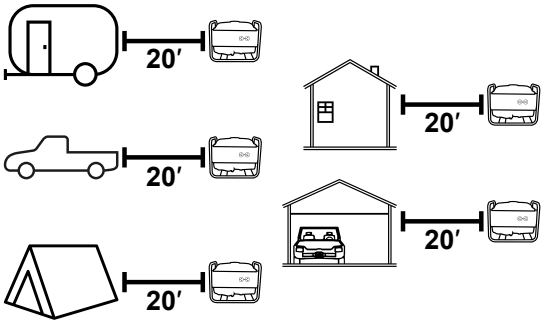

When unpacking, make sure that the product is intact and undamaged. If any parts are missing or broken, please call 1-888-866-5797 as soon as possible.

Copyright© 2024 by Harbor Freight Tools®. All rights reserved.
No portion of this manual or any artwork contained herein may be reproduced in any shape or form without the express written consent of Harbor Freight Tools.
Diagrams within this manual may not be drawn proportionally. Due to continuing improvements, actual product may differ slightly from the product described herein. Tools required for assembly and service may not be included.

⚠ WARNING

Read this material before using this product. Failure to do so can result in serious injury. SAVE THIS MANUAL.

Table of Contents

Specifications 2
Safety 3
Setup 8
Operation 11
Maintenance 17
Troubleshooting 22
Parts List and Diagram 25
Warranties 30

Specifications

Generator	Output	120VAC, 60Hz, 25A, 1 Phase 12VDC, 8A (nominal) 3000 Running Watts 3500 Maximum Starting Watts
	Receptacles	2x NEMA #5-20 (3-prong, 120VAC) 1x NEMA #L5-30 (3-prong, 120VAC) 1x 12VDC Two Pin Outlet
	Battery	CR2032, 3V (non-replaceable)
Displacement		212cc
Compression Ratio		9.0:1
Engine Type		Horizontal Single Cylinder 4-stroke, OHV
Cooling System		Forced air cooled
Fuel	Type	87+ octane, stabilizer-treated unleaded gasoline
	Capacity	2.64 Gallon / 10.00 Liter
Engine Oil	Type SAE	10W-30
	Capacity	20 fl. oz.
Run Time @ 25% Load with full tank		11 hr.
Sound Level at 23 feet, 25% load		56 dB(A)
Bore x Stroke		70mm x 55mm
Spark Plug	Type	F7RTC (Torch) or equivalent
	Gap	0.027"–0.031"
Valve Clearance	Intake	0.002"–0.003"
	Exhaust	0.002"–0.003"
Engine Speed		2600–3600 RPM

The emissions control system for this Engine is warranted for standards set by the U.S. Environmental Protection Agency. For warranty information, refer to the last pages of this manual.

PREDATOR®

WARNING SYMBOLS AND DEFINITIONS	
⚠	This is the safety alert symbol. It is used to alert you to potential personal injury hazards. Obey all safety messages that follow this symbol to avoid possible injury or death.
⚠ DANGER	Indicates a hazardous situation which, if not avoided, will result in death or serious injury.
⚠ WARNING	Indicates a hazardous situation which, if not avoided, could result in death or serious injury.
⚠ CAUTION	Indicates a hazardous situation which, if not avoided, could result in minor or moderate injury.
NOTICE CAUTION	Addresses practices not related to personal injury.

Symbol Definitions

Symbol	Property or Statement
RPM	Revolutions Per Minute
HP	Horsepower
AWG	American Wire Gauge
	WARNING marking concerning Risk of Eye Injury. Wear ANSI-approved safety goggles with side shields.
	Read the manual before set-up and/or use.

Symbol	Property or Statement
	WARNING marking concerning Risk of Hearing Loss. Wear hearing protection.
	WARNING marking concerning Risk of Respiratory Injury. Operate engine OUTSIDE and far away from windows, doors, and vents.
	WARNING marking concerning Risk of Fire while handling fuel. Do not smoke while handling fuel.
	WARNING marking concerning Risk of Fire. Do not refuel while operating. Keep flammable objects away from engine.

IMPORTANT SAFETY INSTRUCTIONS

WARNING! Read all instructions.
Failure to follow all instructions listed below may result in fire, serious injury and/or DEATH.
The warnings and precautions discussed in this manual cannot cover all possible conditions and situations that may occur. It must be understood by the operator that common sense and caution are factors which cannot be built into this product, but must be supplied by the operator.

SAVE THESE INSTRUCTIONS

Setup Precautions

1. Gasoline fuel and fumes are flammable, and potentially explosive. Use proper fuel storage and handling procedures. Do not store fuel or other flammable materials nearby.
2. Have multiple ABC class fire extinguishers nearby.
3. Operation of this equipment may create sparks that can start fires around dry vegetation. A spark arrestor may be required. The operator should contact local fire agencies for laws or regulations relating to fire prevention requirements.
4. Set up and use only on a flat, level, well-ventilated surface.
5. All connections and conduits from the Generator to the load must only be installed by trained and licensed electricians, and in compliance with all relevant local, state, and federal electrical codes and standards, and other regulations where applicable.
6. Connections for standby power to a building electrical system must be made by a qualified electrician. The connection must isolate the Generator power from utility power, and must comply with all applicable laws and electrical codes.
7. A transfer switch should be installed by a licensed electrician in compliance with all applicable laws and electrical codes.
8. Wear ANSI-approved safety goggles, heavy-duty work gloves, and dust mask/respirator during set up.
9. Use only lubricants and fuel recommended in the Specifications chart of this manual.
10. Improper connections to a building electrical system can allow electrical current from the Generator to backfeed into the utility lines. Such backfeed may electrocute utility company workers or others who contact the lines during a power outage, and the Generator may explode, burn, or cause fires when utility power is restored. Consult the utility company and a qualified electrician if intending to use the Generator for back up power.
11. Do not operate the Generator before grounding. The Generator must be earth-grounded in accordance with all relevant electrical codes and standards before operation.
12. Install carbon monoxide alarm(s) with battery backup in nearby buildings according to manufacturer's instructions.

Operating Precautions

1.

CARBON MONOXIDE HAZARD
Using a generator indoors CAN KILL YOU IN MINUTES.
Generator exhaust contains carbon monoxide. This is a poison you cannot see or smell.

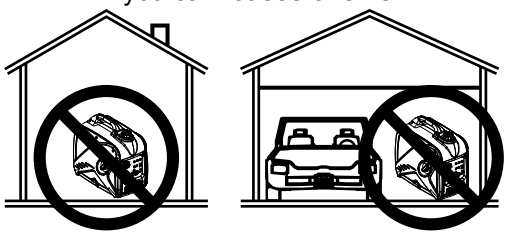

NEVER use inside a home or garage, EVEN IF doors and windows are open.

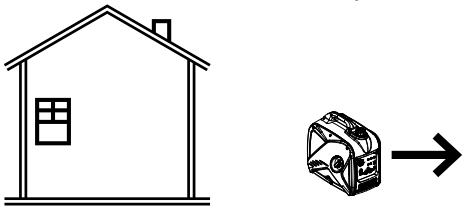

Only use OUTSIDE and far away from windows, doors, and vents.

2. **CARBON MONOXIDE SHUTOFF**

DANGER! TO PREVENT SERIOUS INJURY AND DEATH FROM CARBON MONOXIDE INHALATION:
The Carbon Monoxide sensor is <u>an additional layer of protection</u> only. Do not use the Generator in any area or situation that will allow carbon monoxide to accumulate.

- FLASHING RED LIGHT:
  Dangerous levels of carbon monoxide gas have built up and generator will shutoff. Leave immediately until area has aired out. Move Generator to well-ventilated area before operation.
- FLASHING YELLOW LIGHT:
  Carbon monoxide sensor malfunction. Sensor needs service. Do not use the Generator until the sensor is working properly. For technical questions, please call 1-888-866-5797.

NOTE: Yellow light flashes once after starting to indicate passing self-check and is functioning normally.

Carbon Monoxide sensor must only be serviced by qualified technician to restore it to original settings. Do not modify or tamper with the Carbon Monoxide sensor. Not following these instructions can result in death or serious injury due to Carbon Monoxide sensor malfunction.

3. Never use a generator indoors, including in garages, basements, crawl spaces and sheds. Opening doors and windows or using fans will NOT prevent carbon monoxide build up in the home.
4. When using generators, keep them outdoors and far away from open doors, windows, and vents to avoid toxic levels of carbon monoxide from building up indoors.

5. If you start to feel sick, dizzy, or weak while using a generator, get to fresh air right away. The carbon monoxide from generators can quickly lead to full incapacitation and death.
6. Keep children away from the equipment, especially while it is operating.
7. Keep all spectators at least six feet from the engine during operation.
8. Fire Hazard! Do not fill gas tank while engine is running. Do not operate if gasoline has been spilled. Clean spilled gasoline before starting engine. Do not operate near pilot light or open flame.
9. Do not touch engine during use. Let engine cool down after use.
10. Never store fuel or other flammable materials near the engine.
11. If the plugged in product operates abnormally or unusually slow, immediately stop using the generator as a power source. Read and adhere to the instruction manual of the product to be powered to make sure that it can be safely and efficiently powered by a portable generator.
12. Before connecting an appliance or power cord to the generator: Make sure that it is in good working order. Faulty appliances or power cords can create a potential for electrical shock.
13. Do not exceed the running wattage of the generator. Make sure that the total electrical rating of the all of the tools or appliances plugged into the generator at the same time does not exceed that of the generator. Check that the startup surge will not be beyond the limit of the generator.
14. Avoid substantially overloading which will trip the circuit breaker. Slightly overloading the generator may not trip the circuit breaker, but will lead to premature generator failure.
15. Do not attempt to connect or disconnect load connections while standing in water, or on wet or soggy ground.
16. Do not touch electrically energized parts of the generator and interconnecting cables or conductors with any part of the body, or with any non-insulated conductive object.
17. Connect the generator only to a load that is compatible with the electrical characteristics and running wattage of the generator.
18. Insulate all connections and disconnected wires.
19. Guard against electric shock. Prevent body contact with grounded surfaces such as pipes, radiators, ranges, and refrigerators.
20. Only use a suitable means of transport and lifting devices with sufficient weight bearing capacity when transporting the generator.
21. Secure the generator on transport vehicles to prevent it from rolling, slipping, and tilting.
22. Industrial applications must follow OSHA requirements.
23. Do not leave the generator unattended when it is running. Turn off the generator (and remove safety keys, if available) before leaving the work area.
24. The generator can produce high noise levels. Prolonged exposure to noise levels above 85 dBA is hazardous to hearing. Wear ear protection when operating the generator or when working nearby while it is operating.
25. Keep access doors on enclosures locked.
26. Wear ANSI-approved safety glasses and hearing protection during use.
27. People with pacemakers should consult their physician(s) before use. Electromagnetic fields in close proximity to a heart pacemaker could cause pacemaker interference or pacemaker failure. Caution is necessary when near the engine's magneto or recoil starter.
28. Use only accessories that are recommended by Harbor Freight Tools for your model. Accessories that may be suitable for one piece of equipment may become hazardous when used on another piece of equipment.
29. Do not operate in explosive atmospheres, such as in the presence of flammable liquids, gases, or dust. Gasoline-powered engines may ignite the dust or fumes.
30. Stay alert, watch what you are doing and use common sense when operating this generator. Do not use while tired or under the influence of drugs, alcohol or medication.
31. Dress properly. Do not wear loose clothing or jewelry. Keep hair, clothing and gloves away from moving parts. Loose clothes, jewelry or long hair can be caught in moving parts.
32. Parts, especially exhaust system components, get very hot during use. Stay clear of hot parts.
33. Do not cover the generator during operation.
34. Keep the generator and surrounding area clean at all times.
35. Do not smoke, or allow sparks, flames, or other sources of ignition around the equipment, especially when refuelling.
36. Use the equipment, accessories, etc., in accordance with these instructions and in the manner intended for the particular type of equipment, taking into account the working conditions and the work to be performed. Use of the equipment for operations different from those intended could result in a hazardous situation.
37. Do not operate the equipment with known leaks in the engine's fuel system.

38. When spills of fuel or oil occur, they must be cleaned up immediately. Dispose of fluids and cleaning materials as per any local, state, or federal codes and regulations. Store oil rags in a bottom-ventilated, covered, metal container.
39. Keep hands and feet away from moving parts. Do not reach over or across equipment while operating.
40. Before use, check for misalignment or binding of moving parts, breakage of parts, and any other condition that may affect the equipment's operation. **If damaged, have the equipment serviced before using.** Many accidents are caused by poorly maintained equipment.
41. Use the correct equipment for the application. Do not modify the equipment and do not use the equipment for a purpose for which it is not intended.
42. Extension Cord - Make sure your extension cord is in good condition. When using an extension cord, be sure to use one heavy enough to carry the current your product will draw. An undersized extension cord will cause a drop in line voltage resulting in loss of power and overheating.

    The table below shows the correct cord size to use depending on cord length and nameplate ampere rating. If in doubt, use the next heavier gauge. The smaller the gauge number, the heavier the cord.

RECOMMENDED MINIMUM WIRE GAUGE FOR EXTENSION CORDS				
CURRENT (AMPS)	**Load @ 120V (WATTS)**	**0 ~ 50 ft**	**50 ~ 75 ft**	**75 ~ 100 ft**
2	240	18 AWG		
4	480	18 AWG		16 AWG
6	720	18 AWG	16 AWG	14 AWG
8	960	16 AWG		12 AWG
10	1200	16 AWG	14 AWG	12 AWG
15	1800	14 AWG	12 AWG	10 AWG
20	2400	12 AWG	10 AWG	
25	3000	12 AWG	10 AWG	8 AWG
30	3600	10 AWG	8 AWG	

Parallel Kit Precautions

⚠WARNING

TO PREVENT SERIOUS INJURY, DEATH, AND GENERATOR AND/OR EQUIPMENT DAMAGE FROM ELECTRIC SHOCK AND FIRE:

1. **Follow Parallel Kit instructions provided with Kit for connection and use of a Parallel Kit.**
2. Only connect two identical Inverter Generators together using a Parallel Kit.
3. Connect Parallel Kit only to terminals marked "Parallel Outlets" on the front of the Generator.
4. Do not remove or connect a Parallel Kit while the Generator is running.
5. Do not use a Parallel Kit that is attached to only one Generator.

Service Precautions

1. **Before service, maintenance, or cleaning:**
   a. **Unplug all devices from the generator.**
   b. **Turn the Combination Switch to its "OFF" position.**
   c. **Allow the engine to completely cool.**
   d. **Then, remove the spark plug cap from the spark plug.**
2. Keep all safety guards in place and in proper working order. Safety guards include muffler, air cleaner, mechanical guards, and heat shields, among other guards.
3. **Keep all electrical equipment clean and dry.** Replace any wiring where the insulation is cracked, cut, abraded, or otherwise degraded. Replace terminals that are worn, discolored, or corroded. Keep terminals clean and tight.
4. **Do not alter or adjust any part of the equipment or its engine that is sealed by the manufacturer or distributor. Only a qualified service technician may adjust parts that may increase or decrease governed engine speed.**
5. Wear ANSI-approved safety goggles, heavy-duty work gloves, and dust mask/respirator during service.

6. Maintain labels and nameplates on the equipment. These carry important information. If unreadable or missing, contact Harbor Freight Tools for a replacement.
7. Have the equipment serviced by a qualified repair person using only identical replacement parts. This will ensure that the safety of the equipment is maintained. Do not attempt any service or maintenance procedures not explained in this manual or any procedures that you are uncertain about your ability to perform safely or correctly.
8. Store equipment out of the reach of children.
9. Follow scheduled engine and equipment maintenance.

Refueling:

1. Do not refill the fuel tank while the engine is running or hot.
2. Do not smoke, or allow sparks, flames, or other sources of ignition around the equipment, especially when refuelling.
3. **Do not fill fuel tank to the top.** Leave a little room for the fuel to expand as needed.
4. Refuel in a well-ventilated area only.
5. Wipe up any spilled fuel and allow excess to evaporate before starting engine. **To prevent FIRE, do not start the engine while the smell of fuel hangs in the air.**

Button/Coin Battery Safety

⚠WARNING

- **INGESTION HAZARD:** This product contains a button cell or coin battery.
- **DEATH** or serious injury can occur if ingested.
- A swallowed button cell or coin battery can cause **Internal Chemical Burns** in as little as **2 hours**.
- **KEEP** new and used batteries **OUT OF REACH OF CHILDREN**
- **Seek immediate medical attention** if a battery is suspected to be swallowed or inserted inside any part of the body.

This symbol means:
INGESTION HAZARD: This product contains a button cell or coin battery.

1. Remove and immediately recycle or dispose of used batteries according to local regulations and keep away from children. Do NOT dispose of batteries in household trash or incinerate.
2. Even used batteries may cause severe injury or death.
3. Call a local poison control center for treatment information.
4. Non-rechargeable batteries are not to be recharged.
5. Do not force discharge, recharge, disassemble, heat above 158°Fahrenheit or incinerate. Doing so may result in injury due to venting, leakage or explosion resulting in chemical burns.

SAVE THESE INSTRUCTIONS.

Read the ENTIRE IMPORTANT SAFETY INFORMATION section at the beginning of this manual including all text under subheadings therein before set up or use of this product.

WARNING

TO PREVENT SERIOUS INJURY AND FIRE: Operate only with proper spark arrestor installed.

Operation of this equipment may create sparks that can start fires around dry vegetation. A spark arrestor may be required.
The operator should contact local fire agencies for laws or regulations relating to fire prevention requirements.

At high altitudes, the engine's carburetor, governor, and any other parts that control the fuel-air ratio will need to be adjusted by a qualified mechanic to allow efficient high-altitude use and to prevent damage to the engine and any other devices used with this product.

Grounding

The Generator must be properly grounded in accordance with all relevant electrical codes and standards before operation. In many locations, local code will not require this generator to be grounded when used with cord and plug equipment plugged directly into the receptacles on the generator. However, your local regulations may require the generator to be grounded. Contact a licensed electrician or consult local authorities regarding local grounding requirements. If grounding is required, have the unit grounded by a qualified electrician if you are not qualified to do so.

General grounding instructions are as follows:

Use one of the following as the grounding electrode:

Pipe or conduit, minimum ¾ in. diameter, minimum 8 ft. long. If steel, it must have anti-corrosion coating.

Rod, stainless steel or copper- or zinc-coated steel, minimum 5/8 in. diameter, minimum 8 ft. long.

1. Drive electrode at least 8 ft. vertically into the ground.
   a. If rock layer prevents vertical entry, drive at an angle not exceeding 45 degrees from vertical.
   b. If rock layer prevents angle entry, bury electrode in horizontal trench at least 30 in. deep.
2. The upper end of electrode must be protected if above ground level.
3. Connect a #6 AWG grounding wire (not included) from the Grounding Terminal on the Generator Control Panel to the buried electrode.

For additional information on grounding methods, please see the National Electrical Code.

NOTICE: The portable generator Neutral conductor is isolated from the frame and from the AC receptacle ground pin. Electrical devices that require a connection between one conductor pin and the grounded receptacle pin may not function properly.

Electric Starter Battery Connection

For the electric start function, the included 12VDC Battery must be connected before first use.

1. Remove the Battery Access Door.
2. Make sure the black strap stretches over the top of the Battery and hooks into the Battery Platform.
3. Remove the covers from the Battery Terminals.
4. Locate the black and red battery cables.
5. Connect the red cable to the positive battery terminal first. Then connect the black cable to the negative battery terminal.
6. Replace the Battery Access Door.

Components and Controls

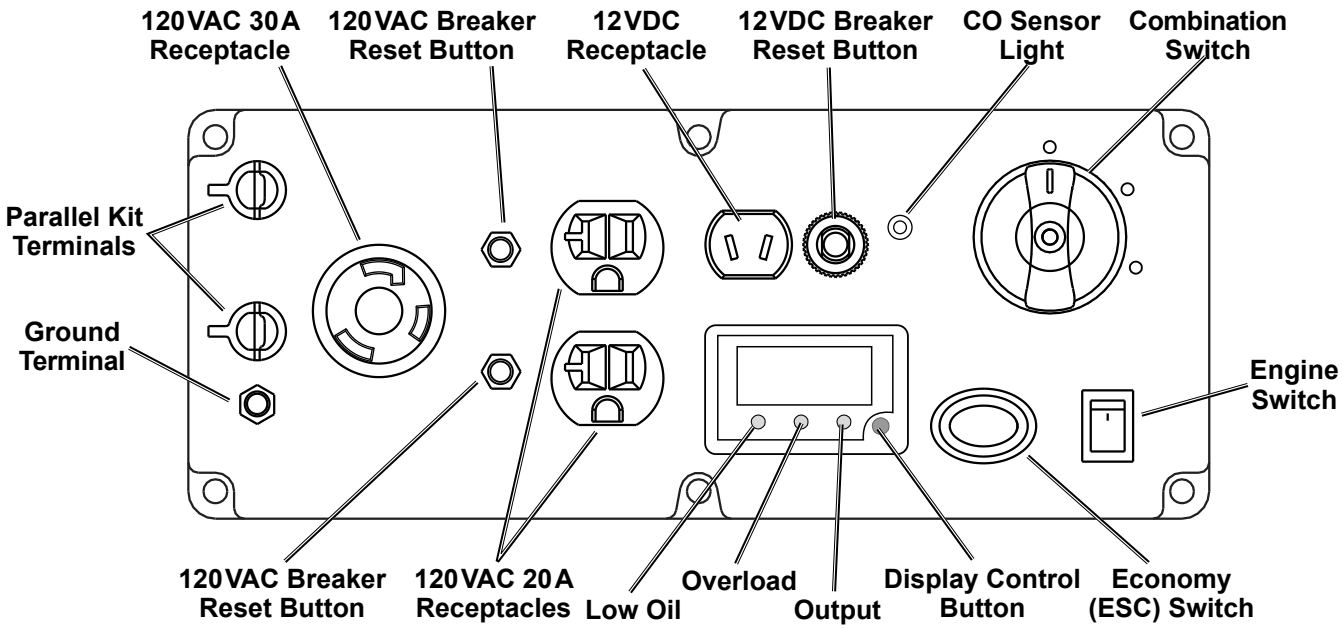

Figure B: Control Panel

Note: Exact location and scale of panel elements may vary slightly from illustration.

WARNING! TO PREVENT SERIOUS INJURY: Follow Parallel Kit instructions for connection and use of a Parallel Kit (Parallel Kit and instructions sold separately).

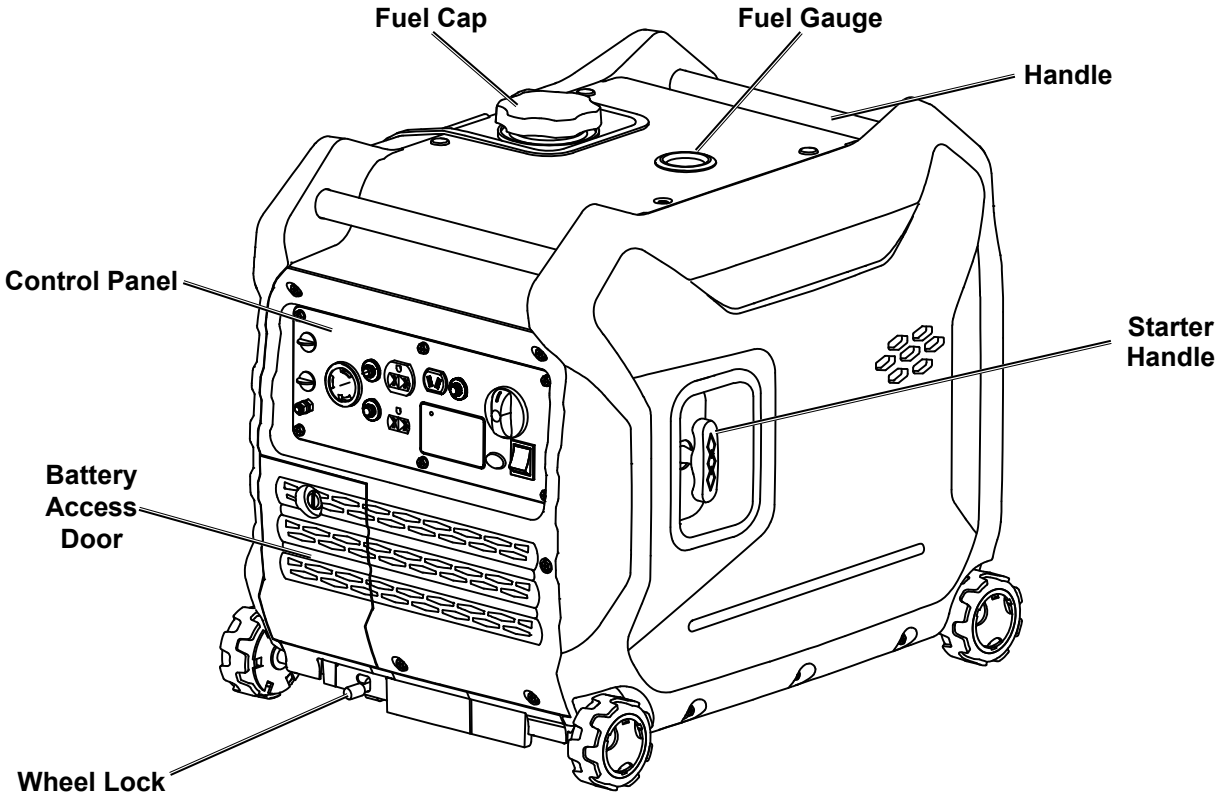

Figure C: Generator Front

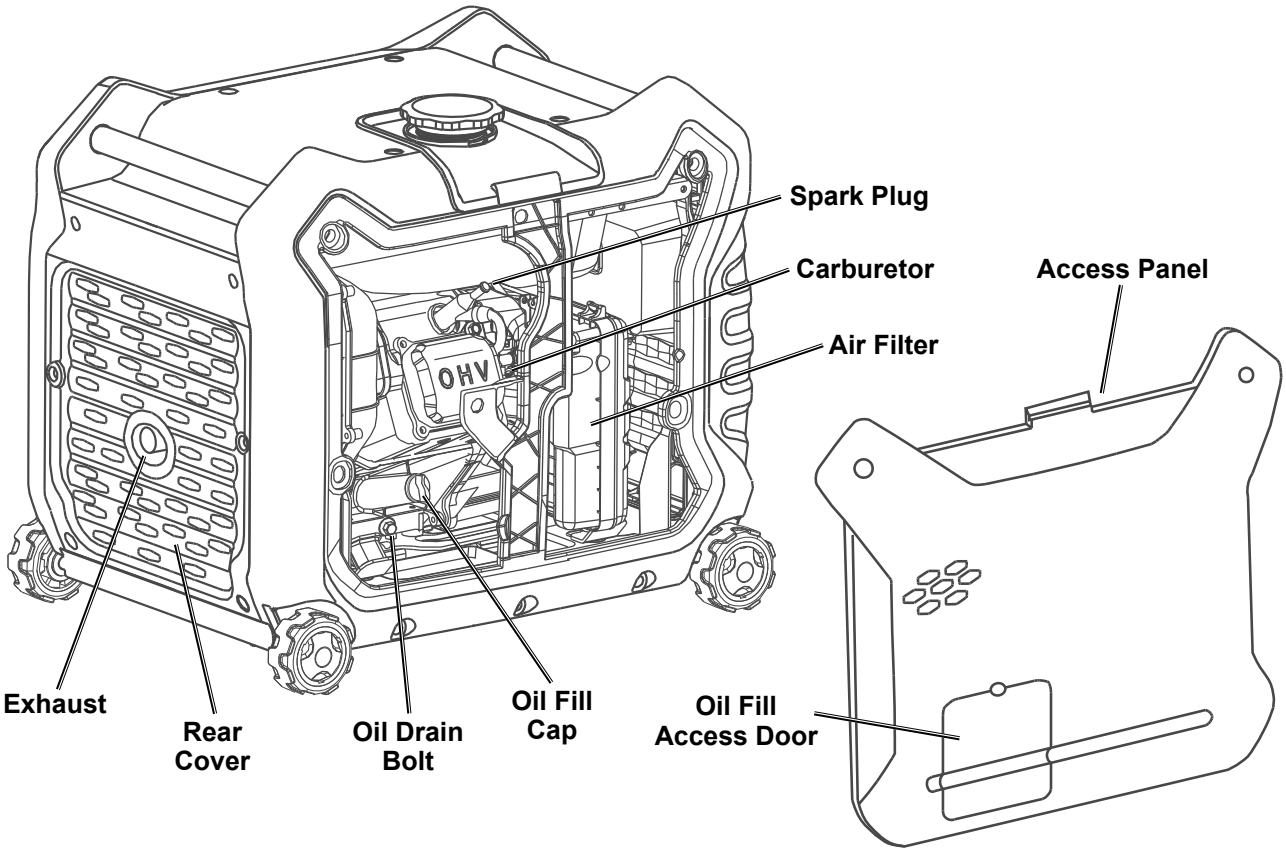

Figure D: Generator Rear and Interior

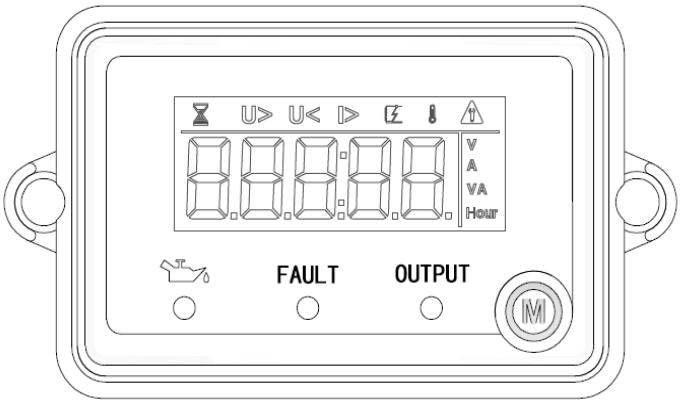

Figure E: Display Screen Symbology

Symbol	Meaning
	Normal
U >	AC Overvoltage
U <	AC Undervoltage
I >	Generator Output Overcurrent
	Generator Output Short Circuit
	Inverter Overheating
	Maintenance Time

Read the ENTIRE IMPORTANT SAFETY INFORMATION section at the beginning of this manual including all text under subheadings therein before set up or use of this product.

Pre-Start Checks

Inspect Engine and Generator looking for damaged, loose, and missing parts before set up and starting.
If any problems are found, do not use equipment until fixed properly.

Checking and Filling Engine Oil

NOTICE: Generator is shipped without engine oil. Engine's crankcase MUST be filled with oil before first use. Your Warranty is VOID if the Engine's crankcase is not properly filled with oil before first use and before each use thereafter. Before each use, check the oil level. Engine will not start with low or no engine oil.

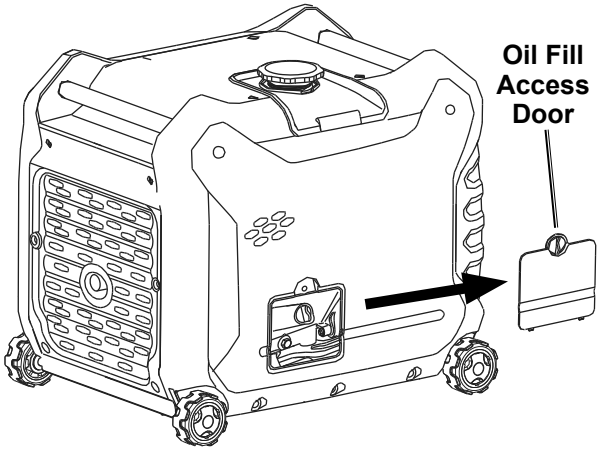

1. Make sure the Engine is stopped and is level.
2. On the left side of the Generator, loosen the Screw and remove the Oil Fill Access Door, as shown to the right.
3. Clean the top of the Oil Fill Cap/Dipstick and the area around it. Remove the Cap/Dipstick, turning it counterclockwise.
4. Check the oil level. The oil level should be up to the edge of the hole as shown.
5. As needed, add the appropriate type of oil until the oil level is at the proper level. SAE 10W-30 oil is recommended for general use.
6. Thread the Oil Fill Cap/Dipstick back in clockwise and replace the Oil Fill Access Door.

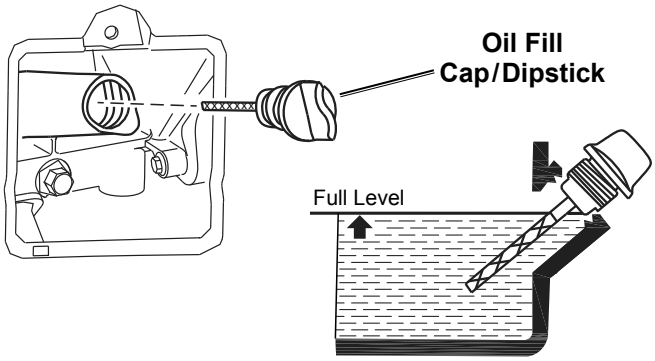

NOTICE: Do not run the engine with too little oil. Engine will shut off if engine oil level is too low.

Checking and Filling Fuel

WARNING! TO PREVENT SERIOUS INJURY FROM FIRE:
Fill the fuel tank in a well-ventilated area away from ignition sources. If the Engine is hot from use, shut the Engine off and wait for it to cool before adding fuel.
Do not smoke.

1. Clean the Fuel Cap and the area around it.
2. Unscrew and remove the Fuel Cap.
3. Remove the Strainer and remove any dirt and debris. Then replace the Strainer.

Note: Do not use gasoline containing more than 10% ethanol (E10). Do not use E85 ethanol. Add fuel stabilizer to the gasoline or the Warranty is VOID.

Note: Do not use gasoline that has been stored in a metal fuel container or a dirty fuel container. It can cause particles to enter the carburetor, affecting Engine performance and/or causing damage.

4. If needed, fill the Fuel Tank to about 1 inch under the fill neck of the Fuel Tank with 87 octane or higher unleaded gasoline that has been treated with a fuel stabilizer additive. Follow fuel stabilizer manufacturer's recommendations for use.
5. Replace the Fuel Cap.
6. Wipe up any spilled fuel and allow excess to evaporate before starting engine. To prevent FIRE, do not start the engine while the smell of fuel hangs in the air.

Starting the Engine

Before Starting the Engine

a. **Inspect the generator and engine.**
b. **Disconnect all electrical loads from the generator.**
c. **Fill the engine with the proper amount and type of both stabilizer-treated unleaded gasoline and oil.**

Manual Start

1. Move the Economy (ESC) Switch to the OFF position.

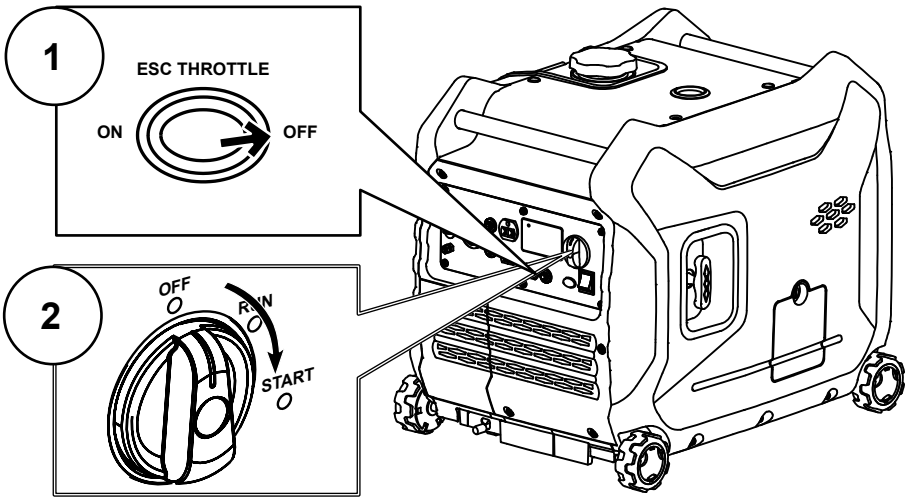

2. Turn the Combination Switch to the START position.

3. Grip the Starter Handle of the Engine loosely and pull it slowly several times to allow the gasoline to flow into the Engine's carburetor. Then pull the Starter Handle gently until resistance is felt. Allow Cable to retract fully and then pull it quickly. Repeat until the Engine starts. Do not let the Starter Handle snap back against the housing. Hold it as it recoils so it doesn't hit the housing.

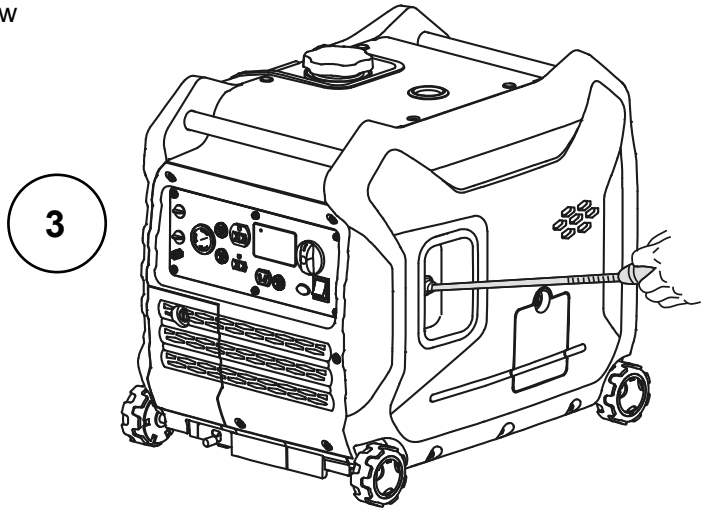

If engine does not start:

- **Check engine oil level**.
  Engine will not start with low or no engine oil.
- **Check spark arrestor cleanliness**.
  Engine will not start if spark arrestor is clogged.
- **For warm engine** – turn Combination Switch to RUN before trying to start it again.

4. The OUTPUT light illuminates when the Engine starts and the Generator produces power. Allow the Engine to run for several seconds, then move the Combination Switch slowly to its RUN position.

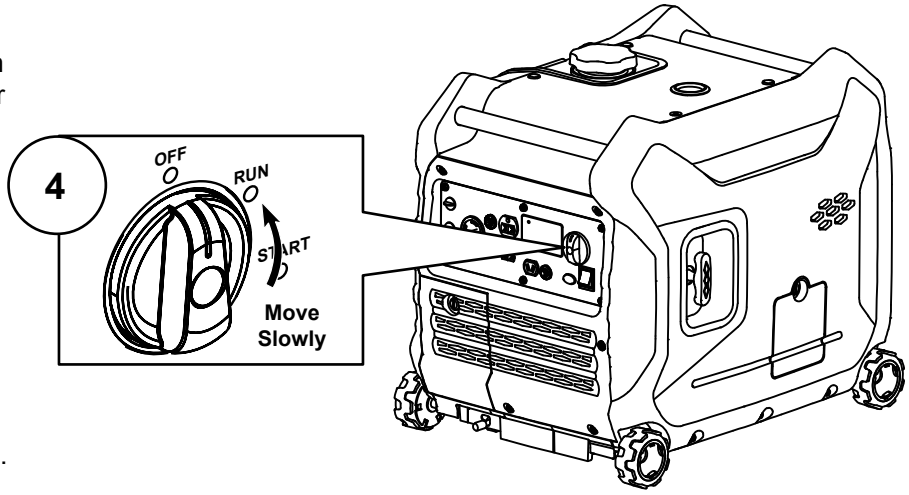

Note: Moving the Combination Switch too fast could stall the Engine.

IMPORTANT: Allow the Engine to run at no load for five minutes after each start-up so that the Engine can stabilize.

Electric Start

1. Move the Economy (ESC) Switch to the OFF position.

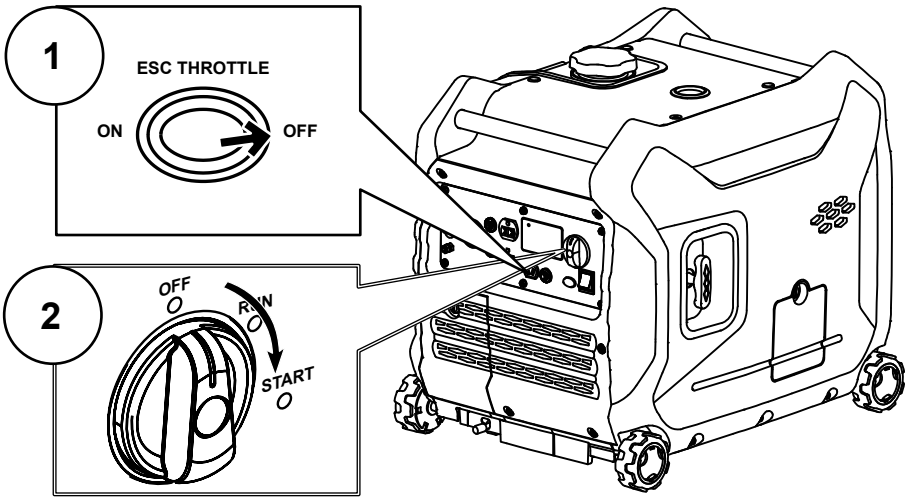

2. Turn the Combination Switch to the START position.

3. Press and hold the Starter Button to start the Engine. If Engine does not start within 3 seconds, release Starter Button. Wait at least 10 seconds, then try again.

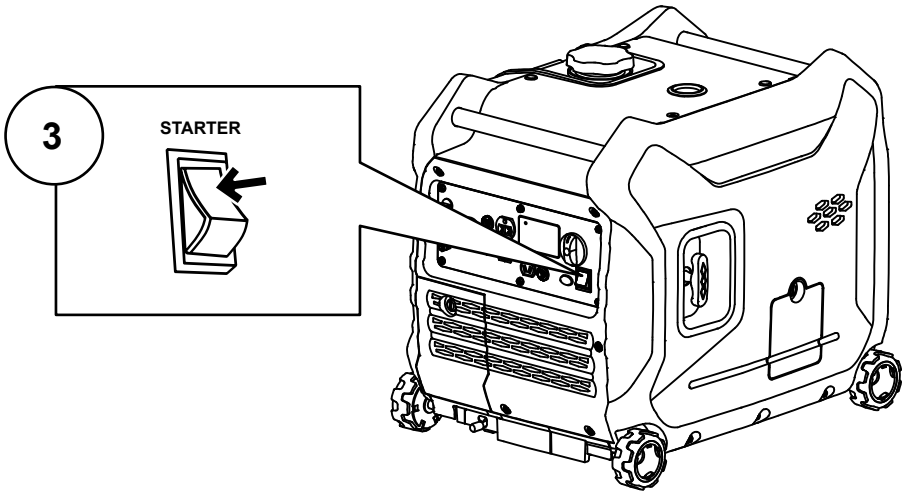

Note: If engine does not start, check engine oil level. Engine will not start with low or no engine oil.

Note: If warm engine does not start, turn Combination Switch to RUN before trying to start it again.

4. The OUTPUT light illuminates when the Engine starts and the Generator produces power. Allow the Engine to run for several seconds, then move the Combination Switch slowly to its RUN position.

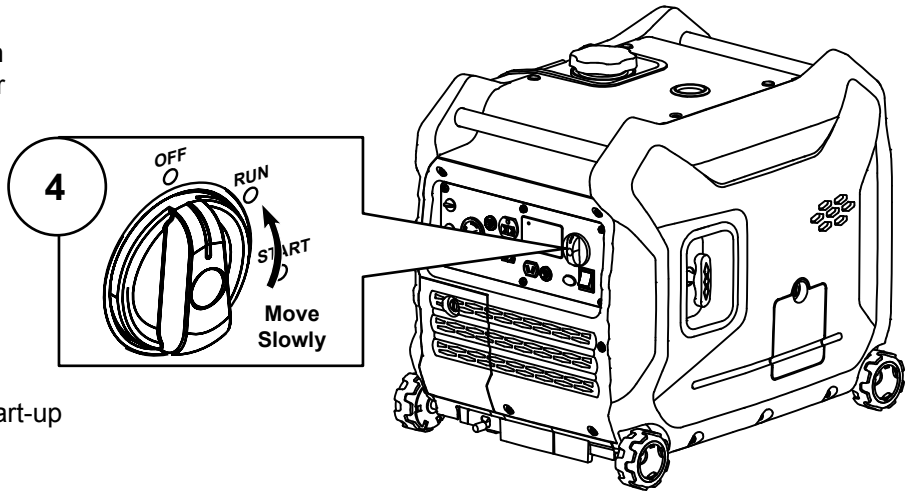

Note: Moving the Combination Switch too fast could stall the Engine.

IMPORTANT: Allow the Engine to run at no load for five minutes after each start-up so that the Engine can stabilize.

Break-in Period

a. Breaking-in the Engine will help to ensure proper equipment and Engine operation.

b. The break-in period will last about 30 hours of use.
DO NOT exceed 75% of the Generator's running wattage during this period.

- Change the engine oil after this period.

Under normal operating conditions subsequent maintenance follows the schedule explained in the **MAINTENANCE** section.

CARBON MONOXIDE SHUTOFF

DANGER! TO PREVENT SERIOUS INJURY AND DEATH FROM CARBON MONOXIDE INHALATION:
The Carbon Monoxide sensor is an additional layer of protection only. Do not use the Generator in any area or situation that will allow carbon monoxide to accumulate.

- FLASHING RED LIGHT:
  Dangerous levels of carbon monoxide gas have built up. Leave immediately until area has aired out. Move Generator to well-ventilated area before operation.

- FLASHING YELLOW LIGHT:
  Carbon monoxide sensor malfunction. Sensor needs service. Call 1-888-866-5797 as soon as possible. Do not use the Generator until the sensor is working properly.
  NOTE: Yellow light flashes once after starting to indicate passing self-check and is functioning normally.

Carbon Monoxide sensor must only be serviced by qualified technician to restore it to original settings. Do not modify or tamper with the Carbon Monoxide sensor. Not following these instructions can result in death or serious injury due to Carbon Monoxide sensor malfunction.

Nominal 12VDC Output

1. Move the Economy (ESC) Switch to the OFF position.
2. Only use the 12VDC receptacle to charge a 12 volt lead-acid type battery using an appropriate charge controller. (Battery and controller not included.) The 12VDC output is not regulated.
3. Do not connect any device to the 12VDC terminal that draws more than 8 amps.
4. If this 12VDC circuit protection is tripped, reduce the load, and press the Reset Button next to the outlet.

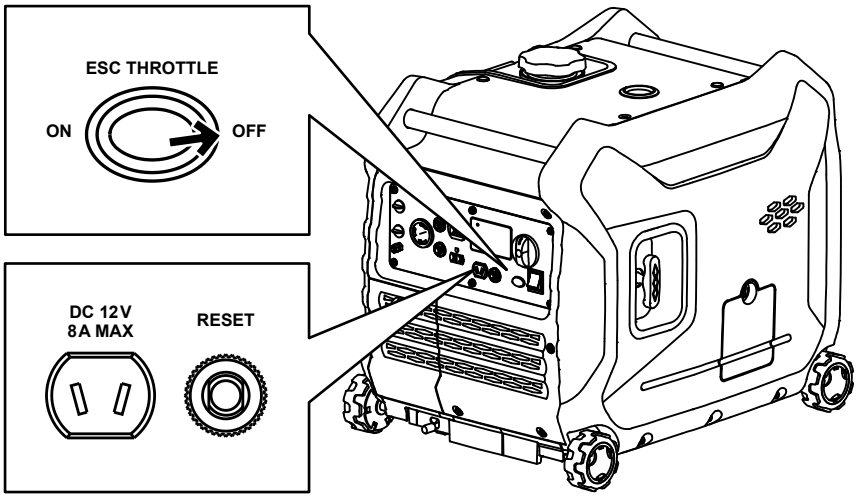

Connecting 120VAC Loads to the Generator

Calculate Power Draw:

Power draw can be calculated by multiplying *volts* and *amps*. The resulting number is *wattage*.

- Never exceed the running wattage for the Generator or any outlet amperage rating.
- Refer to appliance/tool owner's manuals to determine the wattage of electrical load devices.
- Long power cords and extension cords draw additional power. Keep cord length at a minimum.

Wattage Estimates

Refer to your device documentation for start-up and running wattage requirements.
Check nameplate wattages on all loads before connecting to Generator.

Plug the power cord of the 120 volt appliance/tool into the 120VAC Outlet on the Generator. Plug in appliances from largest to smallest load.

Note: Do not allow the Generator to completely run out of fuel with devices attached. A Generator's output may sharply spike as it runs out of fuel, causing damage to attached devices.

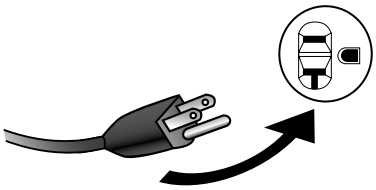

Plug Load In

Overload Indicator

Note: The OVERLOAD light may turn on for a few seconds as a large device starts up. This is normal for loads approaching the capacity of this Generator.

1. The total combined load through the outlet on the Generator must not exceed the running power of the unit.
2. If the OVERLOAD light turns on and the Generator stops producing power, it has been overloaded.
3. Turn off and disconnect all electrical devices and stop the Engine. Compare device requirements to Generator rating and reduce the total wattage of connected devices if necessary. Move anything that may be limiting Generator ventilation away.
4. Check if any circuit breakers have tripped and make sure that ALL circuit breakers are reset before starting the Generator again.
5. Restart the Engine and reconnect devices while being careful to not overload Generator.

Low Oil Indicator

1. If the Engine oil level is too low, the LOW OIL light turns on and the Engine will automatically shut off.
2. The Engine cannot be restarted until the proper amount of oil has been added. Add the appropriate type of oil until the oil level is at the proper level. SAE 10W-30 oil is recommended for general use.

NOTICE: Do not run the engine with too little oil. Engine will shut off if engine oil level is too low.

Economy (ESC) Switch

1. Turn the Economy (ESC) Switch ON to limit noise and fuel consumption for lighter generator loads.
2. Turn the Economy (ESC) Switch OFF to operate engine at full speed:
   a. when starting
   b. when a heavy load is applied
   c. when using the 12VDC output

Digital Display Screen

The Display Screen can be used to monitor the operating status of the Generator. Use the Display Control Button to scroll through the following indicators:

- V – Voltage
- A – Amperage
- VA – Volt Amps/Watts
- Hour – current run time and accumulative run time

Stopping the Engine

To stop the Engine in an emergency, turn the Combination Switch OFF.

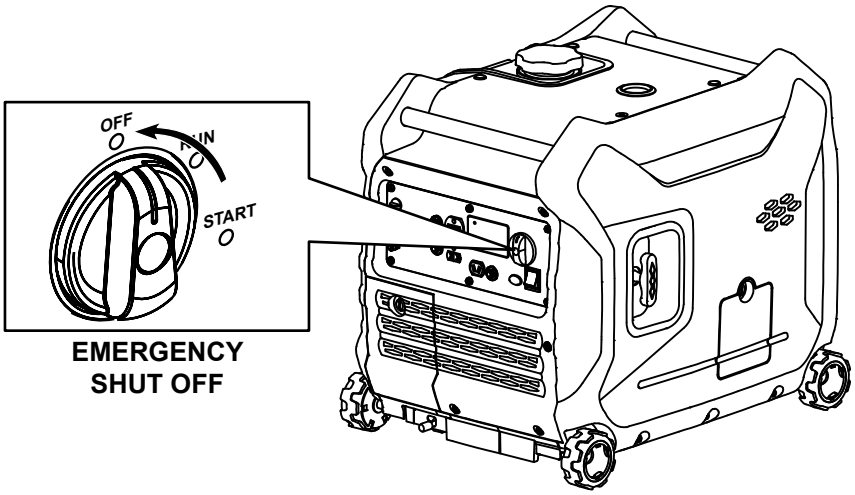

Under normal conditions, use the following procedure to shut off the Generator:

1. Turn all electrical load devices off and unplug them from the Generator.

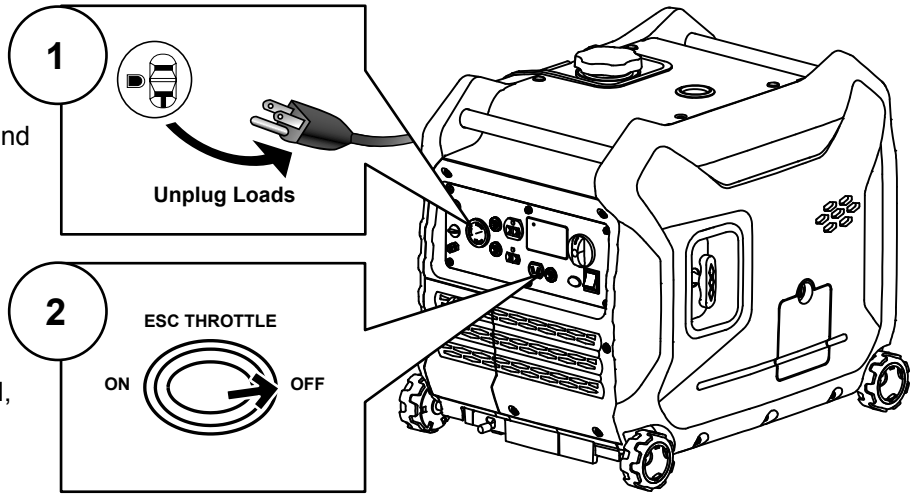

2. If the Economy (ESC) Switch is ON, turn it to the OFF position.

3. Turn the Combination Switch OFF.

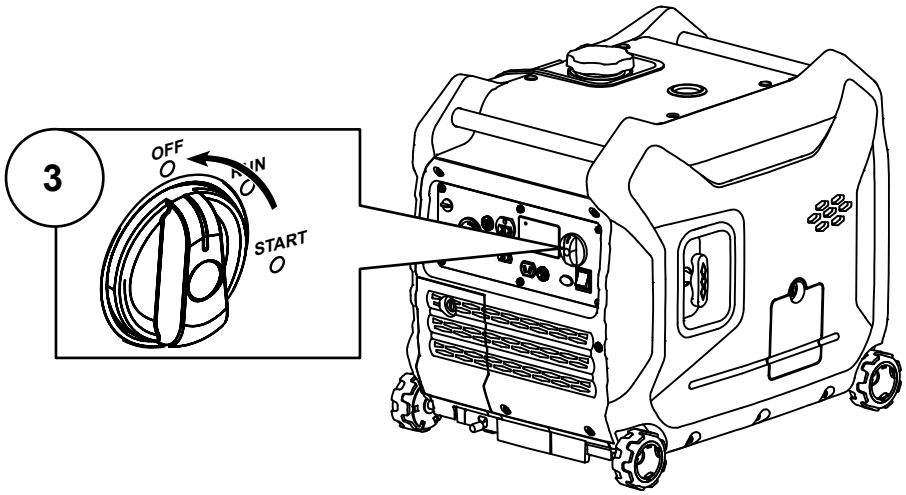

⚠WARNING

TO PREVENT SERIOUS INJURY FROM ACCIDENTAL STARTING:
Turn the Combination Switch of the equipment to its "OFF" position, wait for the engine to cool, and disconnect the spark plug cap before performing any inspection, maintenance, or cleaning procedures.

TO PREVENT SERIOUS INJURY FROM EQUIPMENT FAILURE:
Do not use damaged equipment. If abnormal noise, vibration, or excess smoking occurs, have the problem corrected before further use.

Follow all service instructions in this manual. The engine may fail critically if not serviced properly.

Many maintenance procedures, including any not detailed in this manual, will need to be performed by a qualified technician for safety. If you have any doubts about your ability to safely service the equipment or engine, have a qualified technician service the equipment instead.

Cleaning, Maintenance, and Lubrication Schedule

Note: This maintenance schedule is intended solely as a general guide. If performance decreases or if equipment operates unusually, check systems immediately. The maintenance needs of each piece of equipment will differ depending on factors such as duty cycle, temperature, air quality, fuel quality, and other factors.

Note: The following procedures are in addition to the regular checks and maintenance explained as part of the regular operation of the engine and equipment.

Procedure	Before Each Use	Monthly or every 8 hr. of use	Every 3 mo. or 50 hr. of use	Every 6 mo. or 100 hr. of use	Yearly or every 300 hr. of use	Every 2 Years	Page
1. Brush off outside of engine 2. Check engine oil level 3. Check air filter	✓						
Change engine oil				✓			18
Clean/replace air cleaner			✓*				19
1. Check and clean spark plug 2. Check and clean spark arrestor				✓			20
1. Check/adjust idle speed 2. Check/adjust valve clearance 3. Clean fuel tank, strainer and carburetor 4. Clean carbon build-up from combustion chamber					✓**		–
Replace fuel line if necessary						✓**	–

*Service more frequently when used in dusty areas.

**These items should be serviced by a qualified technician.

Checking and Filling Fuel

⚠WARNING! TO PREVENT SERIOUS INJURY FROM FIRE:
Fill the fuel tank in a well-ventilated area away from ignition sources. If the engine is hot from use, shut the engine off and wait for it to cool before adding fuel.
Do not smoke.

1. Clean the Fuel Cap and the area around it.
2. Unscrew and remove the Fuel Cap.
3. Remove the Strainer and remove any dirt and debris. Then replace the Strainer.

Note: Do not use gasoline containing more than 10% ethanol (E10). Do not use E85 ethanol. Add fuel stabilizer to the gasoline or the Warranty is VOID.

Note: Do not use gasoline that has been stored in a metal fuel container or a dirty fuel container. It can cause particles to enter the carburetor, affecting engine performance and/or causing damage.

4. If needed, fill the Fuel Tank to about 1 inch under the fill neck of the Fuel Tank with 87 octane or higher unleaded gasoline that has been treated with a fuel stabilizer additive. Follow fuel stabilizer manufacturer's recommendations for use.
5. Replace the Fuel Cap.
6. Wipe up any spilled fuel and allow excess to evaporate before starting engine. To prevent FIRE, do not start the engine while the smell of fuel hangs in the air.

Engine Oil Change

⚠CAUTION! Oil is very hot during operation and can cause burns. Wait for engine to cool before changing oil.

1. Make sure the Engine is stopped and is level.
2. On the left side of the Generator, loosen the Screw and remove the Oil Fill Access Door, as shown to the right.
3. Lift and tilt the Generator. Remove the Drain Plug on the bottom of the machine, then set the Generator back down on a level surface.
4. Clean the top of the Oil Fill Cap/Dipstick and the area around it. Remove the Cap/Dipstick, turning it counterclockwise.
5. Place an oil drain pan under the Generator and center under the Drain Plug opening. Remove the Oil Drain Bolt, tilt the Generator slightly to facilitate drainage and wait for oil to drain completely. Recycle used oil.
6. Tilt the Generator and replace the Drain Plug, then set the Generator back down on a level surface.
7. Add the appropriate type of oil until the oil level is at the proper level. SAE 10W-30 oil is recommended for general use.

Note: Make sure Generator is level when adding oil to prevent overfilling which could cause engine damage.

8. Check the oil level. The oil level should be up to the edge of the hole as shown.
9. Thread the Oil Fill Cap/Dipstick back in clockwise and replace the Oil Fill Access Door.

NOTICE: Do not run the engine with too little oil. Engine will not start with low or no engine oil.

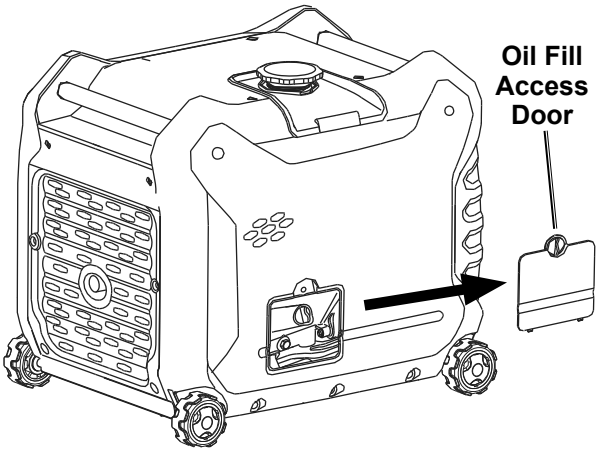

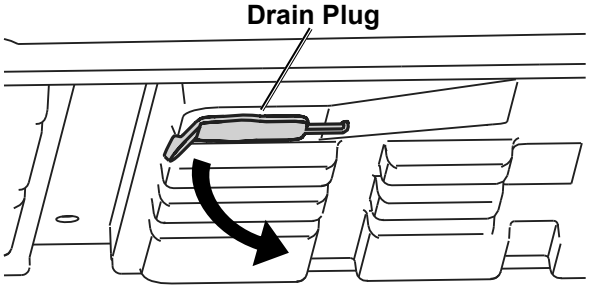

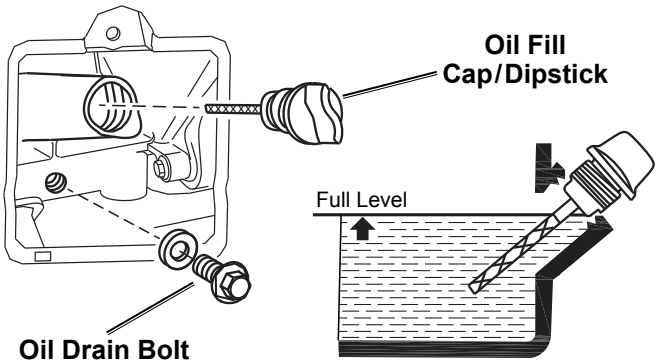

Air Filter Element Maintenance

1. Loosen two screws and remove the Access Panel on the left side of the Generator.

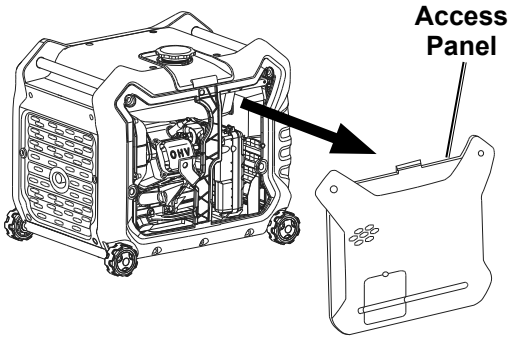

2. Remove the Air Filter Cover and the air filter elements and check for dirt. Clean as described below.

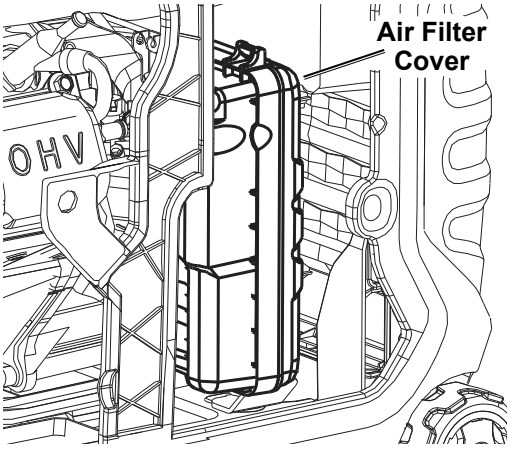

3. **Cleaning:**
   - For "paper" filter elements:
     To prevent injury from dust and debris, wear ANSI-approved safety goggles, NIOSH-approved dust mask/respirator, and heavy-duty work gloves. In a well-ventilated area away from bystanders, use pressurized air to blow dust out of the air filter.
   - For foam filter elements:
     Wash the element in warm water and mild detergent several times. Rinse. Squeeze out excess water and allow it to dry completely. Soak the filter in lightweight oil briefly, then squeeze out the excess oil.
4. Install the cleaned filter.
5. Secure the Air Filter Cover and replace the Access Panel before use.

Spark Arrestor Maintenance

⚠WARNING

TO PREVENT SERIOUS INJURY AND FIRE: Operate only with proper spark arrestor installed.

Operation of this equipment may create sparks that can start fires around dry vegetation. A spark arrestor may be required. The operator should contact local fire agencies for laws or regulations relating to fire prevention requirements.

1. Allow the Generator to cool completely.
2. Remove the 6 Screws (79) from the back of the Generator.
3. Remove the Grate (149).

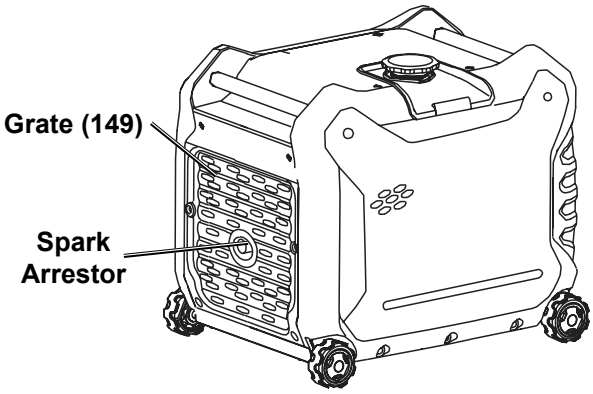

4. Remove the two Bolts that hold the Spark Arrestor Bracket in place.

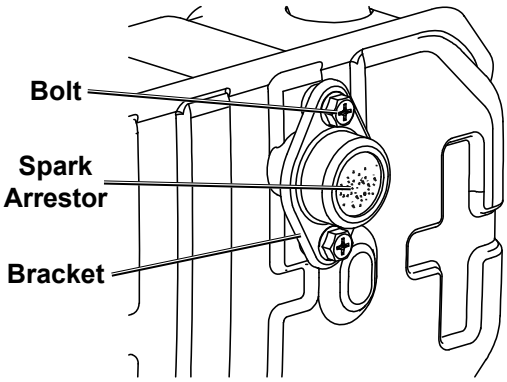

5. Clean the Spark Arrestor using a wire brush (sold separately). Replace arrestor if damaged.
6. **WARNING! TO PREVENT SERIOUS INJURY FROM ACCIDENTAL BRUSH FIRE, secure Spark Arrestor back in place immediately after cleaning and before further operation.**

Spark Plug Maintenance

1. Loosen two screws and remove the Access Panel on the left side of the Generator.

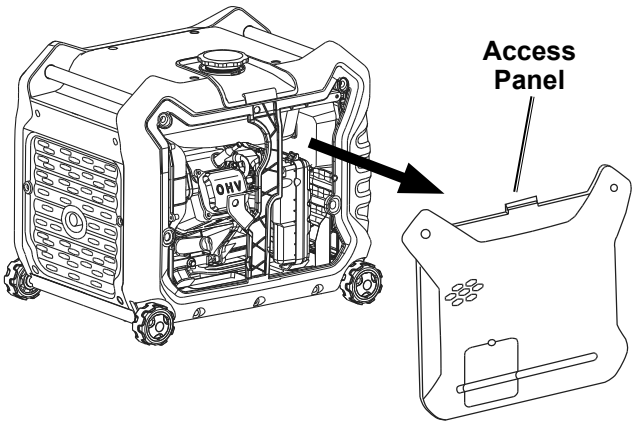

2. Disconnect spark plug cap from end of plug. Clean out debris from around spark plug.

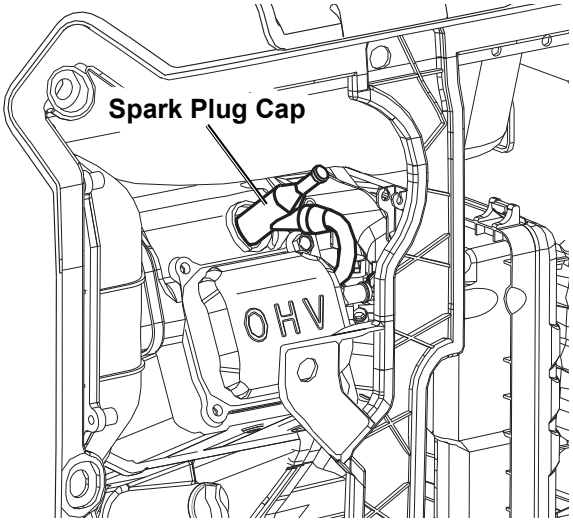

3. Using a spark plug wrench, remove the spark plug.

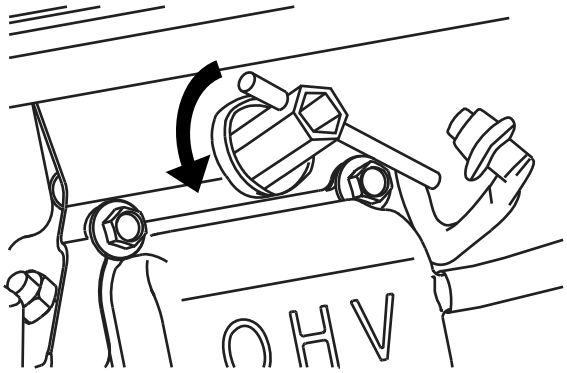

4. Inspect the spark plug:
   If the electrode is oily, clean it using a clean, dry rag. If the electrode has deposits on it, polish it using emery paper. If the white insulator is cracked or chipped, the spark plug needs to be replaced.

NOTICE: Use only F7RTC type spark plug or equivalent. Using an incorrect spark plug may damage the engine.

5. When installing a new spark plug, adjust the plug's gap to the specification on the Specifications chart. Do not pry against the electrode, the spark plug can be damaged.
6. Apply anti-seize material to Spark Plug threads. Install the new spark plug or the cleaned spark plug into the engine.
   - **Gasket-style**:
     Finger-tighten until the gasket contacts the cylinder head, then tighten about 1/2-2/3 turn more.
   - **Non-gasket-style**:
     Finger-tighten until the plug contacts the cylinder head, then tighten about 1/16 turn more.

NOTICE: Tighten the spark plug properly.
If loose, the spark plug will cause the engine to overheat.
If overtightened, the threads in the engine block will be damaged.

7. Apply dielectric spark plug boot protector (not included) to the end of the spark plug and reattach the cap securely.
8. Replace Spark Plug Access Cover and Access Panel.

Storage

When the equipment is to remain idle for longer than 20 days, prepare the engine for storage as follows:

1. **CLEANING**:
   Wait for engine to cool, then clean engine with dry cloth. **NOTICE: Do not clean using water.** The water will gradually enter the engine and cause damage.
2. **FUEL:**
3. **Gasoline Treatment/Draining the Fuel Tank**

   To protect the fuel tank during storage, fill the tank with fresh gasoline that has been treated with a fuel stabilizer additive. Follow fuel stabilizer manufacturer's recommendations for use. Refer to Checking and Filling Fuel Checking and Filling Fuel on page 11.

   Aged gasoline that has not been treated with stabilizer ahead of time must be safely drained away and not run through the engine.

⚠WARNING! TO PREVENT SERIOUS INJURY FROM FIRE:
Fill tank in a well-ventilated area away from ignition sources. If the engine is hot from use, shut the engine off and wait for it to cool before adding fuel. Do not smoke.

Draining the Carburetor

After closing the Fuel Valve, place an appropriate container under the Carburetor and carefully remove the Drain Bolt from the bottom of the Carburetor Bowl, allowing the fuel to drain completely. Replace the Drain Bolt after draining.

WARNING! To prevent serious injury and fire, close the Fuel Valve before draining the Carburetor.

4. **LUBRICATION:**
   a. Change engine oil.
   b. Clean out area around spark plug. Remove spark plug and pour one tablespoon of engine oil into cylinder through spark plug hole.
   c. Replace spark plug, but leave spark plug cap disconnected.
   d. Pull Starter Handle to distribute oil in cylinder. Stop after one or two revolutions when you feel the piston start the compression stroke (when you start to feel resistance).
5. **STORAGE AREA:**
   Cover and store in a dry, level, well-ventilated area out of reach of children. Storage area should also be away from ignition sources, such as water heaters, clothes dryers, and furnaces.

NOTICE: During extended storage periods the Engine must be started every 3 months and allowed to run for 15–20 minutes or the Warranty is VOID.

6. **AFTER STORAGE:**
   Before starting the engine after storage, keep in mind that untreated gasoline will deteriorate quickly. Drain the fuel tank and change to fresh fuel if untreated gasoline has been sitting for a month, if treated gasoline has been sitting beyond the fuel stabilizer's recommended time period, or if the engine does not start.

Troubleshooting

Problem	Possible Causes	Probable Solutions
Engine will not start	FUEL RELATED:	FUEL RELATED:
	1. No fuel in tank or fuel valve closed.	1. Fill fuel tank with fresh 87+ octane stabilizer-treated unleaded gasoline and open fuel valve. **Do not use gasoline with more than 10% ethanol (E15, E20, E85, etc.).**
	2. Choke not in START position, cold engine.	2. Move Choke to START position.
	3. Gasoline with more than 10% ethanol used. (E15, E20, E85, etc.)	3. Clean out ethanol rich gasoline from fuel system. Replace components damaged by ethanol. Use fresh 87+ octane stabilizer-treated unleaded gasoline only. **Do not use gasoline with more than 10% ethanol (E15, E20, E85, etc.).**
	4. Low quality or deteriorated, old gasoline.	4. Use fresh 87+ octane stabilizer-treated unleaded gasoline. **Do not use gasoline with more than 10% ethanol (E15, E20, E85, etc.).**
	5. Carburetor not primed.	5. Pull on Starter Handle to prime.
	6. Dirty fuel passageways.	6. Clean out passageways using fuel additive. Heavy deposits may require further cleaning.
	7. Carburetor needle stuck. Fuel can be smelled in the air.	7. **Gently** tap side of carburetor float chamber with screwdriver handle.
	8. Too much fuel in chamber. This can be caused by the carburetor needle sticking.	8. Turn Choke to RUN position. Remove spark plug and pull the start handle several times to air out the chamber. Reinstall spark plug and set Choke to START position.
	9. Clogged Fuel Filter.	9. Replace Fuel Filter.
	IGNITION (SPARK) RELATED:	IGNITION (SPARK) RELATED:
	1. Power Switch at OFF position.	1. Turn Power Switch to ON.
	2. Spark plug cap not connected securely.	2. Connect spark plug cap properly.
	3. Spark plug electrode wet or dirty.	3. Clean spark plug.
	4. Incorrect spark plug gap.	4. Correct spark plug gap.
	5. Spark plug cap broken.	5. Replace spark plug cap.
	6. Circuit breaker tripped (electric start models only).	6. Reset circuit breaker. Check wiring and starter motor if breaker continues to trip.
	7. Incorrect spark timing or faulty ignition system.	7. Have qualified technician diagnose/ repair ignition system.
	COMPRESSION RELATED:	COMPRESSION RELATED:
	1. Cylinder not lubricated. Problem after long storage periods.	1. Pour tablespoon of oil into spark plug hole. Crank engine a few times and try to start again.
	2. Loose or broken spark plug. (Hissing noise will occur when trying to start.)	2. Tighten spark plug. If that does not work, replace spark plug. If problem persists, may have head gasket problem, see #3.
	3. Loose cylinder head or damaged head gasket. (Hissing noise will occur when trying to start.)	3. Tighten head. If that does not remedy problem, replace head gasket.
	4. Engine valves or tappets mis-adjusted or stuck.	4. Have qualified technician adjust/ repair valves and tappets.
	ENGINE OIL RELATED:	ENGINE OIL RELATED:
	1. Low engine oil.	1. Fill engine oil to proper level. Check engine oil before EVERY use.
	2. Engine mounted on slope, triggering low oil shutdown.	2. Operate engine on level surface. Check engine oil level.
	SPARK ARRESTOR RELATED:	SPARK ARRESTOR RELATED:
	1. Spark Arrestor clogged with soot.	1. Clean and replace Spark Arrestor.

Follow all safety precautions whenever diagnosing or servicing the generator or engine.

Problem	Possible Causes	Probable Solutions
Engine misfires	1. Spark plug cap loose. 2. Incorrect spark plug gap or damaged spark plug. 3. Defective spark plug cap. 4. Old or low quality gasoline. 5. Incorrect compression.	1. Check cap and wire connections. 2. Re-gap or replace spark plug. 3. Replace spark plug cap. 4. Use only fresh 87+ octane stabilizer-treated unleaded gasoline. **Do not use gasoline with more than 10% ethanol (E15, E20, E85, etc.).** 5. Diagnose and repair compression. (Use **Engine will not start: COMPRESSION RELATED** section.)
Engine stops suddenly	1. Carbon Monoxide level high. Red light on Carbon Monoxide Sensor illuminates. 2. CO Sensor Alarm flashes yellow continually shortly after starting. 3. CO Sensor Alarm flashes yellow continually after longer period of operation. 4. Low oil shutdown. 5. Fuel tank empty or full of impure or low quality gasoline. 6. Defective fuel tank cap creating vacuum, preventing proper fuel flow. 7. Faulty magneto. 8. Disconnected or improperly connected spark plug cap.	1. Leave area immediately and allow area to ventilate thoroughly. Only operate generator outside. 2. Carbon monoxide sensor malfunction. Sensor needs service. Call 1-888-866-5797 as soon as possible. Do not use the Generator until the sensor is working properly. 3. Make sure to operate generator within rated ambient temperature; maintain minimum 5 ft. clearance from all sides. 4. Fill engine oil to proper level. Check engine oil before EVERY use. 5. Fill fuel tank with fresh 87+ octane stabilizer treated unleaded gasoline. Do not use gasoline with more than 10% ethanol (E15, E20, E85, etc.). 6. Test/replace fuel tank cap. 7. Have qualified technician service magneto. 8. Secure spark plug cap.
Engine stops when under heavy load	1. Dirty air filter 2. Engine running cold.	1. Clean element. 2. Allow engine to warm up prior to operating equipment.
Engine knocks	1. Old or low quality gasoline. 2. Engine overloaded. 3. Incorrect spark timing, deposit buildup, worn engine, or other mechanical problems.	1. Fill fuel tank with fresh 87+ octane stabilizer-treated unleaded gasoline. **Do not use gasoline with more than 10% ethanol (E15, E20, E85, etc.).** 2. Do not exceed equipment's load rating. 3. Have qualified technician diagnose and service engine.
Engine backfires	1. Impure or low quality gasoline. 2. Engine too cold. 3. Intake valve stuck or overheated engine. 4. Incorrect timing.	1. Fill fuel tank with fresh 87+ octane stabilizer-treated unleaded gasoline. **Do not use gasoline with more than 10% ethanol (E15, E20, E85, etc.).** 2. Use cold weather fuel and oil additives to prevent backfiring. 3. Have qualified technician diagnose and service engine. 4. Check engine timing.
Attached device doesn't have power	1. Device not plugged in properly. 2. Circuit Breaker tripped. 3. Product needs service.	1. Turn off and unplug the device, then plug it back in again and turn on. 2. Turn off and unplug device, reset Circuit Breaker, plug in device and turn on. 3. Have product repaired.
Attached device begins to operate abnormally	1. Problem with device. 2. Rated load capacity exceeded.	1. Immediately unplug device. Have device repaired by a qualified technician, or replace device. 2. Lower the number of items plugged into the generator to stay within the rated capacity, or use a more powerful generator.

Follow all safety precautions whenever diagnosing or servicing the generator or engine.

PLEASE READ THE FOLLOWING CAREFULLY

THE MANUFACTURER AND/OR DISTRIBUTOR HAS PROVIDED THE PARTS LISTS AND ASSEMBLY DIAGRAMS IN THIS MANUAL AS A REFERENCE TOOL ONLY. NEITHER THE MANUFACTURER OR DISTRIBUTOR MAKES ANY REPRESENTATION OR WARRANTY OF ANY KIND TO THE BUYER THAT HE OR SHE IS QUALIFIED TO MAKE ANY REPAIRS TO THE PRODUCT, OR THAT HE OR SHE IS QUALIFIED TO REPLACE ANY PARTS OF THE PRODUCT. IN FACT, THE MANUFACTURER AND/OR DISTRIBUTOR EXPRESSLY STATES THAT ALL REPAIRS AND PARTS REPLACEMENTS SHOULD BE UNDERTAKEN BY CERTIFIED AND LICENSED TECHNICIANS, AND NOT BY THE BUYER. THE BUYER ASSUMES ALL RISK AND LIABILITY ARISING OUT OF HIS OR HER REPAIRS TO THE ORIGINAL PRODUCT OR REPLACEMENT PARTS THERETO, OR ARISING OUT OF HIS OR HER INSTALLATION OF REPLACEMENT PARTS THERETO.

Record Product's Serial Number Here:_____

Note: If product has no serial number, record month and year of purchase instead.

Note: Some parts are listed and shown for illustration purposes only, and are not available individually as replacement parts. Specify UPC 193175546258 when ordering parts.

Parts List

Part	Description	Qty
1	Hex Bolt With Flange	6
2	Cylinder Head Cover	1
3	Engine Oil Strainer	1
4	Packing,Breather Chamber	1
5	Hex Bolt With Flange	2
6	Cap,Breather Chamber	1
7	Breather Tube	1
8	Air Deflector	1
9	Hex Bolt With Flange	4
10	Spark Plug	1
11	Cylinder Head	1
12	Split Damping Ring	2
13	Valve Rocker Combination	2
14	Valve Adjustment Cap	2
15	Retainer, Valve Spring	2
16	Inner Spring Of Valve	2
17	Valve Kit	1
18	Valve Rocker Shaft	2
19	Push Rod	2
20	Lifter, Valve	2
21	Valve Oil Seal	1
22	Gasket For Cylinder Head Cover	1
23	Stud	2
24	Stud	2
25	Carburetor Gasket	1
26	Mounting Bracket Of Speed-Regulated Step Motor	1
27	Cross Recessed Pan Head Screw	2
28	Rubber Plug	1
29	Cross Recessed Pan Head Screw	2
30	Carburetor	1
31	Clip Combination	4
32	Oil Tube	1
33	Carburetor Gasket	1
34	Choke Valve Bracket	1
35	Carburetor Gasket	1
36	Nut With Flange	3
37	Air Filter	1
38	Heat Insulating Pad For Carburetor	1
39	Carburetor Gasket	1
40	Hex Bolt With Flange	16
41	Piston	1
42	Location Pin	2
43	Crankshaft	1
44	Piston Ring Combination	1
45	Piston Pin	1
46	Steel Cable Baffle Ring	2
47	Gasket For Cylinder Head	1
48	Location Pin	4
49	Oil Rule Combination	1
50	Sealing Plug Screw	1
51	Flat Washer	7
52	Pressing Plate	1
53	Crankcase Cover	1
54	Hex Bolt With Flange	6
55	Oil Level Sensor	1
56	Bearing	2
57	Crankcase Cover Gasket	1
58	Camshaft Assy	1
59	Crankcase Body	1
60	Location Wire Nail	1
61	Pressing Plate	1
62	Oil Seal	1
63	Coil Assy.,Ignition	1
64	Hex Bolt With Flange	2
65	Side Plate	1

Part	Description	Qty
66	Cross Recessed Pan Head Screw	2
68	Carbon Monoxide Sensor	1
67	Hex Bolt With Flange	4
69	Flat Washer	1
70	Hex Bolt With Flange	1
71	Motor Fan	1
72	Starting Disc	1
73	Hex Bolt With Flange	4
74	Fan Cover Comp.	1
75	Cable Cleat	1
76	Hex Bolt With Flange	12
77	Elastic Washer	4
78	Connecting Rod	1
79	Cross Small Pan Head Screws / Pad Comp.	24
80	Power Socket Combination	1
81	Power Socket Combination	1
82	Overcurrent Protector	1
83	Overcurrent Protector	1
84	Outlet	1
85	Outlet	1
86	Start Control Switch	1
87	Idle Switch	1
88	Power Socket Combination	1
89	Multifunctional Indicating Meter	1
90	Components Of Control Panel	1
91	Control Panel Harness	1
92	Location Wire Nail	1
93	Battery Maintenance Cover	1
94	Slotted Pan Head Screw With Waisted Shank	3
95	Panel Bed	1
96	Cross Recessed Pan Head Tapping Screw	33
97	Cable Connection Panel	1
98	Inverter Inlet Air Deflector	1
99	Combination Switch	1
100	Components Of Oil Switch	1
101	Oil Tube	1
102	Cushioning Rubber	2
103	Inverter Assy	1
104	Storage Battery	1
105	Pull Rope Handle	1
106	Engine Assembly	1
107	Inverter Mounting Bracket	1
108	Vertical Skeleton Frame	2
109	Vertical Skeleton Frame	2
110	Hex Bolt With Flange	10
111	Rope Support	1
112	Engine Support Plate	1
113	Engine Support Plate	1
114	Nut With Flange	16
115	Machine Buffering Seat	1
116	Machine Buffering Seat	1
117	Cushioning Rubber	1
118	Self Control Constant Current Charger	1
119	Battery Baffle	1
120	Lighter	1
121	Cushioning Rubber	2
122	Caulking	1
123	Square Nuts	6
124	Clip Nut	16
125	Support Wheel Stop Block	1
126	Frame Comp Backplane	1
127	Machine Buffering Seat	1
128	Machine Buffering Seat	1

Part	Description	Qty
129	Support Wheel Dust Cap	4
130	Components Of Supporting Wheel	4
131	Pin Clip	4
132	Nut	8
133	Components Of Frame	1
134	Lock Disc Of Machine Set Supporting Wheel Shaft	1
135	Support Wheel Stop Arm	1
136	Lock Washer	11
137	Generator Shell(Right)	1
138	Hex Head Flange Bolt Axial	6
139	Exterior Cover(Right)	1
140	Recoil Hand Shank Cover	1
141	Cushioning Rubber	1
142	Components Of Starting Motor	1
143	Muffler Guard Shield	1
144	Muffler Bracket	1
145	Hex Bolt With Flange	2
146	Muffler Body	1
147	Muffler Guard Shield	1
148	Wind Scooper	1
149	Shutter	1
150	Clip Combination	1
151	Clip Combination	1
152	Exterior Cover(Left)	1
153	Generator Shell(Left)	1
154	Tank Damping Cushion	1
155	Tank Damping Cushion	2
156	Tank Cover	1
157	Rubber Lagging For Pouring Orifice	1
158	Tarpaulin	4
159	Frame Top Cover	1
160	Lever Combination	2
161	Hex Bolt With Flange	4

Part	Description	Qty
162	Flat Washer	4
163	Liner Tube Of Tank Damping Cushion	4
164	Tank Damping Cushion	4
165	Filter Screen Combination	1
166	Tank	1
167	Tank Supporting Bracket	1
168	Tank Supporting Bracket	1
169	Bracket,Canister	1
170	Carbon Canister Assy	1
171	Canister Pipe	1
172	Canister Pipe	1
173	Tank Oil Drain	1
174	Motor Stator	8
175	Oil Switch Knob	1
176	Cross Recessed Small Pan Head Screw	1
177	Battery Cushion	1
178	Cushioning Rubber	1
179	Air Filter Bracket	1
180	Outlet Gasket	1
181	Motor Rotor	1
182	Hex Bolt With Flange	2
183	Flat Washer	4
184	Strap	1
185	Location Wire Nail	2
186	Clip Combination	4
187	Put The Oil Rubber	1
188	Earth Wire Of General-Purpose Engine	1
189	Cushioning Rubber	1
190	Location Pin	2
191	Oil Level Sight Glass	1
192	Seal Ring	1
193	Cross Recessed Countersunk Head Screw	2
194	Components Of Oil Level	1

Assembly Diagram

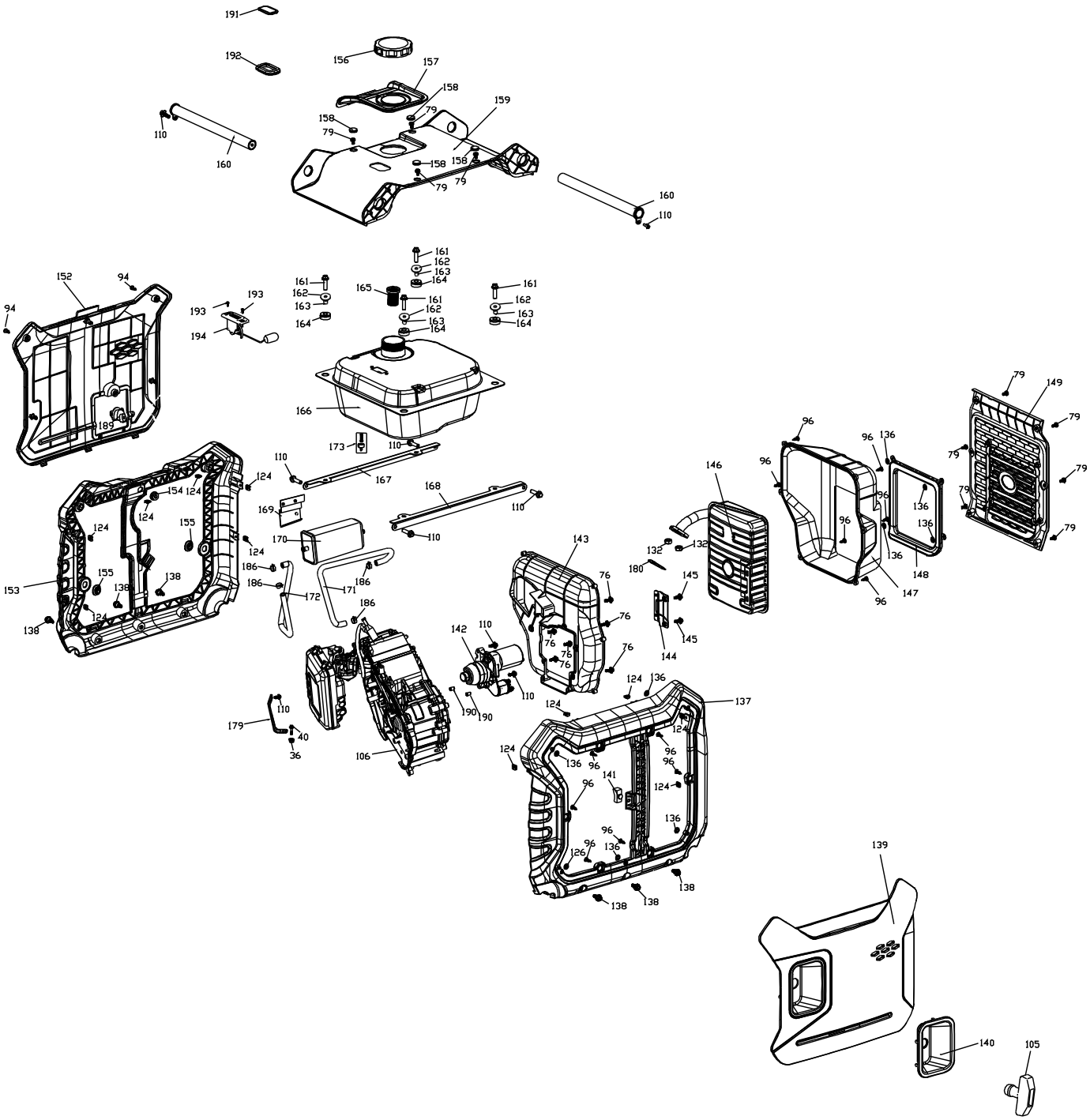

SAFETY

SETUP

OPERATION

MAINTENANCE

Assembly Diagram

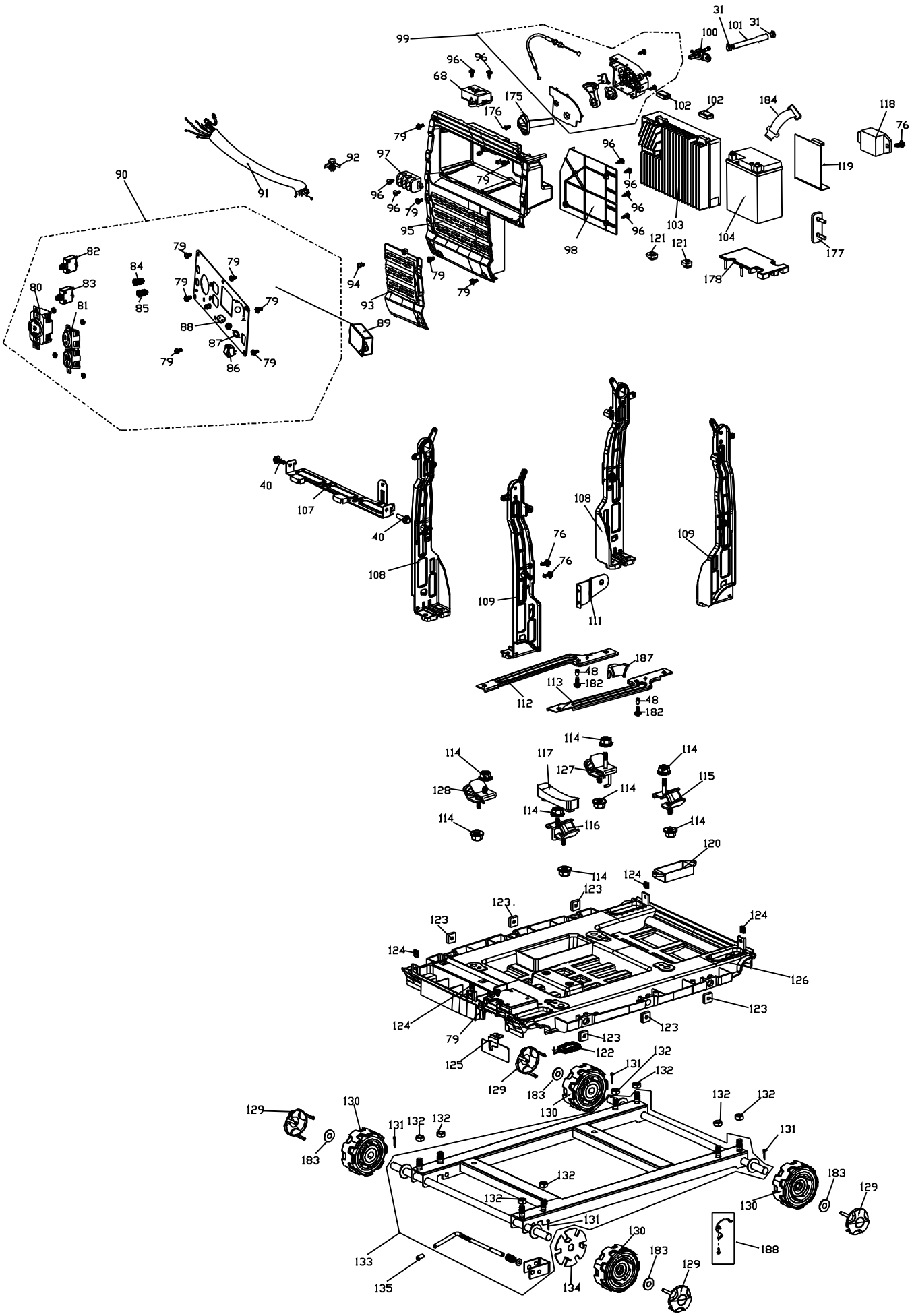

Assembly Diagram

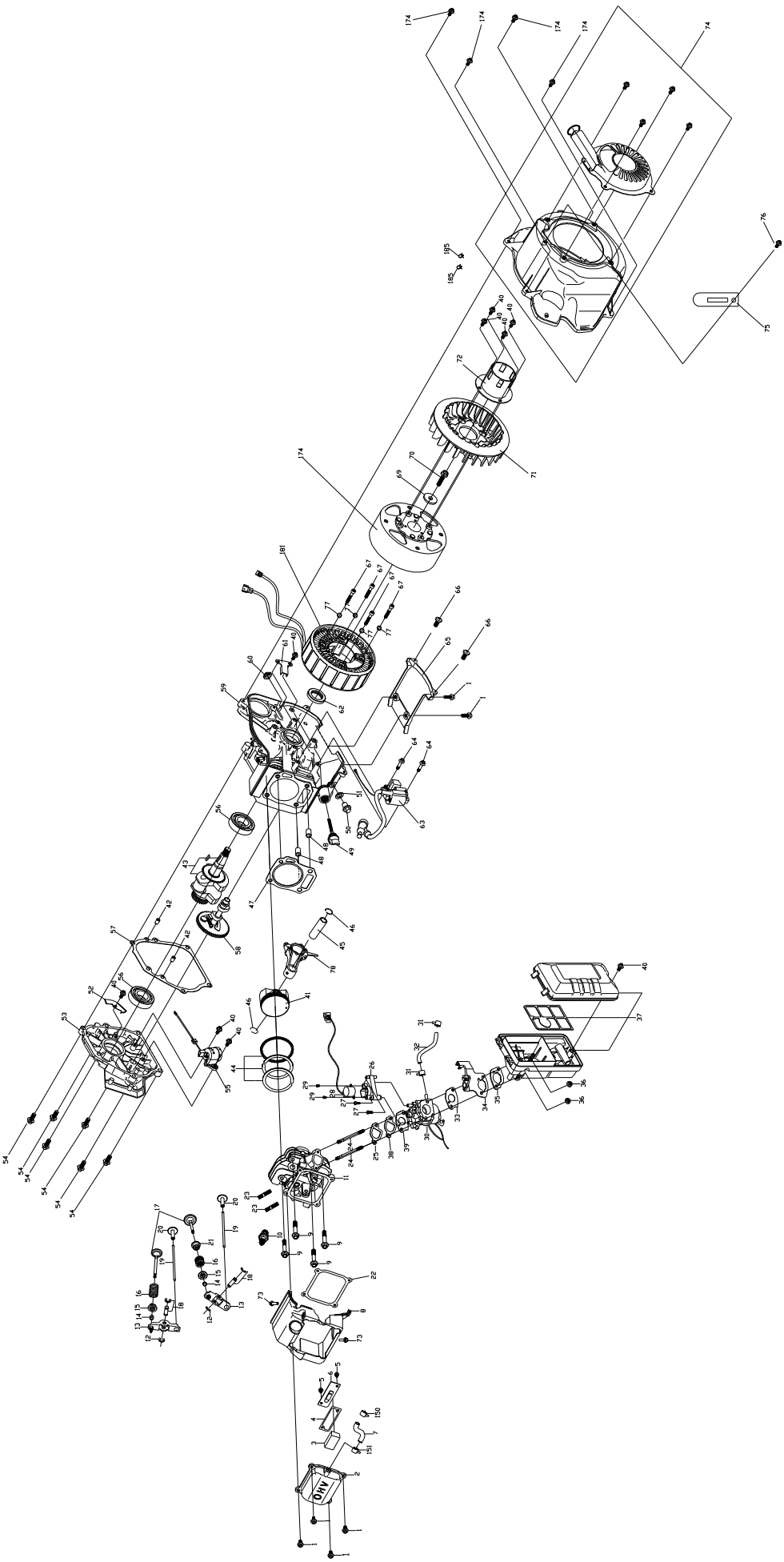

Limited 90 Day Warranty (Retail)

Harbor Freight Tools Co. makes every effort to assure that its products meet high quality and durability standards, and warrants to the original purchaser that this product is free from defects in materials and workmanship for the period of 90 days from the date of purchase. This warranty does not apply to damage due directly or indirectly, to misuse, abuse, negligence or accidents, repairs or alterations outside our facilities, criminal activity, improper installation, normal wear and tear, or to lack of maintenance. We shall in no event be liable for death, injuries to persons or property, or for incidental, contingent, special or consequential damages arising from the use of our product. Some states do not allow the exclusion or limitation of incidental or consequential damages, so the above limitation of exclusion may not apply to you. THIS WARRANTY IS EXPRESSLY IN LIEU OF ALL OTHER WARRANTIES, EXPRESS OR IMPLIED, INCLUDING THE WARRANTIES OF MERCHANTABILITY AND FITNESS, EXCEPT FOR THE EMISSIONS CONTROL SYSTEM WARRANTY BELOW.

To take advantage of this warranty, the product or part must be returned to us with transportation charges prepaid. Proof of purchase date and an explanation of the complaint must accompany the merchandise. If our inspection verifies the defect, we will either repair or replace the product at our election or we may elect to refund the purchase price if we cannot readily and quickly provide you with a replacement. We will return repaired products at our expense, but if we determine there is no defect, or that the defect resulted from causes not within the scope of our warranty, then you must bear the cost of returning the product.

This warranty gives you specific legal rights and you may also have other rights which vary from state to state.

Emissions Control System Warranty

Harbor Freight Tools (HFT) is pleased to explain the emissions control system warranty on your Small Off-Road Engine produced after January 1, 2024 (engine), in addition to the Retail Warranty above. HFT warrants that the emissions control system on your engine is designed, built, and equipped so that it conforms to the United States Environmental Protections Agency's (EPA) emissions requirements in effect at the time of manufacture. HFT also warrants that the emissions control system on your engine will be free from defects in material and workmanship for two (2) years, provided there has been no improper maintenance, misuse, or abuse of your engine.

Your emissions control system may include parts such as the carburetor or fuel-injection system, and the ignition system. Also included may be hoses, belts, connectors and other emissions-related assemblies.

WHAT WE WILL DO

Where a warrantable condition exists, HFT will repair or replace, at our option, any emissions-related part on your engine if it becomes defective, malfunctions, or otherwise fails to conform with this warranty under normal use and service during the two (2) year term of this warranty at no cost to you, including diagnosis, parts and labor. This warranty applies to the original purchaser and any subsequent owner within the two year warranty period.

WHAT IS COVERED?

The following parts are examples of components of the emissions control system and are covered by this two (2) year warranty. For a full list of emissions control components covered by this warranty, please see 40 CFR §1068, Appendix I.

1. Fuel Metering System
   a. Carburetor and its internal parts.
   b. Fuel pump (if so equipped).
   c. Cold start enrichment system.
2. Air Induction System
   a. Intake pipe/manifold.
   b. Air cleaner.
3. Ignition System
   a. Spark plug.
   b. Magneto ignition system.
4. Catalyst System (if so equipped)
   a. Exhaust pipe stud.
   b. Muffler.
   c. Catalytic converter (if so equipped).
5. Miscellaneous Items Used in Above Systems
   a. Vacuum, temperature and time sensitive valves and switches.
   b. Hoses, belts, connectors, and assemblies.

This warranty does not cover normal maintenance services or replacement of maintenance items such as filters, oils, or spark plugs.

WHAT YOU MUST DO TO OBTAIN WARRANTY SERVICE

As the engine owner, you are responsible for the performance of the required maintenance listed in your Owner's Manual. HFT may deny you warranty coverage if your engine or a part has failed due to abuse (including failure to follow the fuel use instructions contained in this manual), neglect, improper maintenance, or unapproved modifications.

In order to obtain warranty repair or replacement, you may either (a) contact HFT product support at 1-888-866-5797 or productsupport@harborfreight.com; or (b) bring the engine/equipment to your nearest Harbor Freight Tools retail store. When going to the retail store or contacting product support, you must indicate the specific emissions control part or defect that you are claiming and the date this was originally purchased. The nearest Harbor Freight Tools retail store can be found on the internet at http://www.harborfreight.com.

PREDATOR®

26677 Agoura Road • Calabasas, CA 91302 • 1-888-866-5797