Owner's Manual & Safety Instructions

Save This Manual Keep this manual for the safety warnings and precautions, assembly, operating, inspection, maintenance and cleaning procedures. Write the product's serial number in the back of the manual near the assembly diagram (or month and year of purchase if product has no number). Keep this manual and the receipt in a safe and dry place for future reference.

18i

CENTRAL MACHINERY®

7" X 10" PRECISION MINI LATHE

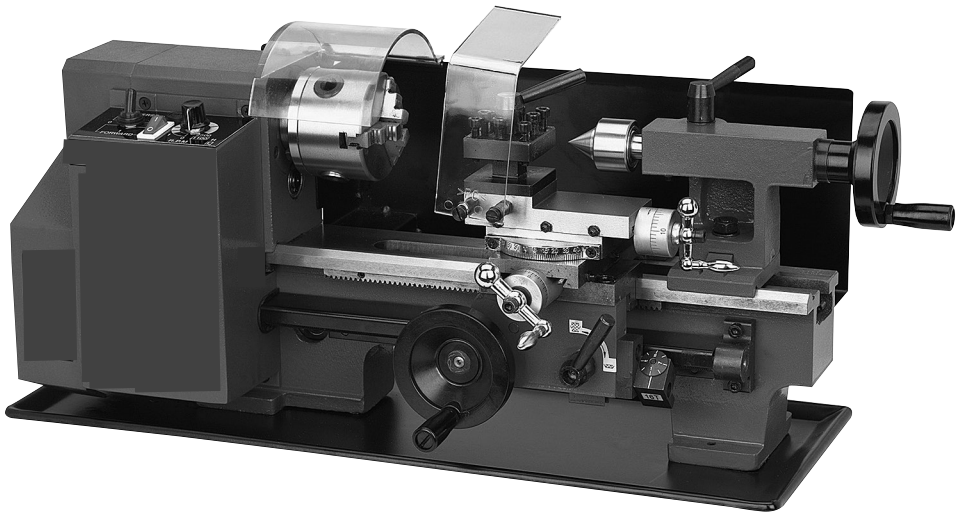

Visit our website at: http://www.harborfreight.com
Email our technical support at: productsupport@harborfreight.com

93212

When unpacking, make sure that the product is intact and undamaged. If any parts are missing or broken, please call 1-888-866-5797 as soon as possible.

Copyright© 2006 by Harbor Freight Tools®. All rights reserved.
No portion of this manual or any artwork contained herein may be reproduced in any shape or form without the express written consent of Harbor Freight Tools.
Diagrams within this manual may not be drawn proportionally. Due to continuing improvements, actual product may differ slightly from the product described herein.
Tools required for assembly and service may not be included.

⚠WARNING

Read this material before using this product.
Failure to do so can result in serious injury.
SAVE THIS MANUAL.

CONTENTS

IMPORTANT SAFETY INFORMATION 3
GENERAL TOOL SAFETY WARNINGS . 3
GROUNDING INSTRUCTIONS 4
110-120 VAC GROUNDED TOOLS: TOOLS WITH THREE PRONG PLUGS 4
MINI LATHE SAFETY WARNINGS 5
SPECIFICATIONS 8
PACKING LIST 8
GENERAL MINI LATHE COMPONENTS 9
POWER CONTROLS OVERVIEW ... 10
CONTROLS ON THE FRONT OF THE LATHE 10
CONTROLS ON THE BACK OF THE LATHE 10
LATHE COMPONENTS OVERVIEW 11
ASSEMBLY INSTRUCTIONS 12
ATTACHING RUBBER FEET OR INSTALLING TO WORKBENCH 12
INSTALLING HANDWHEEL HANDLES 12
INSTALLING GUARDS 13
SET UP 14
INITIAL TEST RUN 14
REPLACEMENT OF CHUCK 15
REPLACEMENT OF JAWS 15
COMPOUND REST ADJUSTMENT 17
TAILSTOCK ADJUSTMENTS 17
TOOL POST ADJUSTMENT 18
AUTOMATIC FEEDING 18
THREADING DIAL 19
OPERATION 20
START UP 20
TO STOP THE LATHE 21
BASIC OPERATIONS 22
THREADING GEARS 23
THREAD SIZE GEAR SETTINGS 23
AUTOMATIC FEED AND THREADING DIAL 24
MAINTENANCE AND SERVICING ... 25
CLEANING, MAINTENANCE, AND LUBRICATION 25
BELT INSPECTION AND TENSIONING 25
GIB ADJUSTMENTS 26
TAILSTOCK ALIGNMENT 27
REPLACEMENT OF CARBON BRUSHES 27
REPLACING THE FUSE 28
TROUBLESHOOTING 29
PARTS LIST 32
ASSEMBLY DIAGRAM 34
WIRING DIAGRAM 35
LIMITED 90 DAY WARRANTY 36

IMPORTANT SAFETY INFORMATION

In this manual, on the labeling, and all other information provided with this product:



This is the safety alert symbol. It is used to alert you to potential personal injury hazards. Obey all safety messages that follow this symbol to avoid possible injury or death.

⚠DANGER **DANGER indicates a hazardous situation which, if not avoided, will result in death or serious injury.**

⚠WARNING **WARNING indicates a hazardous situation which, if not avoided, could result in death or serious injury.**

⚠CAUTION **CAUTION, used with the safety alert symbol, indicates a hazardous situation which, if not avoided, could result in minor or moderate injury.**

NOTICE **NOTICE is used to address practices not related to personal injury.**

CAUTION **CAUTION, without the safety alert symbol, is used to address practices not related to personal injury.**

General Tool Safety Warnings



WARNING Read all safety warnings and instructions. *Failure to follow the warnings and instructions may result in electric shock, fire and/or serious injury.*

Save all warnings and instructions for future reference.

1. KEEP GUARDS IN PLACE and in working order.
2. REMOVE ADJUSTING KEYS AND WRENCHES. Form habit of checking to see that keys and adjusting wrenches are removed from tool before turning it on.
3. KEEP WORK AREA CLEAN. Cluttered areas and benches invite accidents.
4. DON'T USE IN DANGEROUS ENVIRONMENT. Don't use power tools in damp or wet locations, or expose them to rain. Keep work area well lighted.
5. KEEP CHILDREN AWAY. All visitors should be kept safe distance from work area.
6. MAKE WORKSHOP KID PROOF with padlocks, master switches, or by removing starter keys.
7. DON'T FORCE TOOL. It will do the job better and safer at the rate for which it was designed.
8. USE RIGHT TOOL. Don't force tool or attachment to do a job for which it was not designed.

RECOMMENDED MINIMUM WIRE GAUGE FOR EXTENSION CORDS (120 VOLT)

NAMEPLATE AMPERES (at full load)	EXTENSION CORD LENGTH			
	25'	50'	100'	150'
0 – 6	18	16	16	14
6.1 – 10	18	16	14	12
10.1 – 12	16	16	14	12
12.1 – 16	14	12	Do not use.	

TABLE A

9. USE PROPER EXTENSION CORD. Make sure your extension cord is in good condition. When using an extension cord, be sure to use one heavy enough to carry the current your product will draw. An undersized cord will cause a drop in line voltage resulting in loss of power and overheating. Table A shows the correct size to use depending on cord length and nameplate ampere rating. If in doubt, use the next heavier gauge. The smaller the gauge number, the heavier the cord.

10. WEAR PROPER APPAREL. Do not wear loose clothing, gloves, neckties, rings, bracelets, or other jewelry which may get caught in moving parts. Nonslip footwear is recommended. Wear protective hair covering to contain long hair.

11. ALWAYS USE SAFETY GLASSES. Also use face or dust mask if cutting operation is dusty. Everyday eyeglasses only have impact resistant lenses, they are NOT safety glasses.

12. SECURE WORK. Use clamps or a vise to hold work when practical. It's safer than using your hand and it frees both hands to operate tool.

13. DON'T OVERREACH. Keep proper footing and balance at all times.

14. MAINTAIN TOOLS WITH CARE. Keep tools sharp and clean for best and safest performance. Follow instructions for lubricating and changing accessories.

15. DISCONNECT TOOLS before servicing; when changing accessories, such as blades, bits, cutters, and the like.

16. REDUCE THE RISK OF UNINTENTIONAL STARTING. Make sure switch is in off position before plugging in.

17. USE RECOMMENDED ACCESSORIES. Consult the owner's manual for recommended accessories. The use of improper accessories may cause risk of injury to persons.

18. NEVER STAND ON TOOL. Serious injury could occur if the tool is tipped or if the cutting tool is unintentionally contacted.

19. CHECK DAMAGED PARTS. Before further use of the tool, a guard or other part that is damaged should be carefully checked to determine that it will operate properly and perform its intended function – check for alignment of moving parts, binding of moving parts, breakage of parts, mounting, and any other conditions that may affect its operation. A guard or other part that is damaged should be properly repaired or replaced.

20. NEVER LEAVE TOOL RUNNING UNATTENDED. TURN POWER OFF. Don't leave tool until it comes to a complete stop.

GROUNDING INSTRUCTIONS

⚠WARNING **TO PREVENT ELECTRIC SHOCK AND DEATH FROM INCORRECT GROUNDING WIRE CONNECTION READ AND FOLLOW THESE INSTRUCTIONS:**



110-120 VAC Grounded Tools: Tools with Three Prong Plugs

1. In the event of a malfunction or breakdown, grounding provides a path of least resistance for electric current to reduce the risk of electric shock. This tool is equipped with an electric cord having an equipment-

grounding conductor and a grounding plug. The plug must be plugged into a matching outlet that is properly installed and grounded in accordance with all local codes and ordinances.

2. Do not modify the plug provided – if it will not fit the outlet, have the proper outlet installed by a qualified electrician.

3. Improper connection of the equipment-grounding conductor can result in a risk of electric shock. The conductor with insulation having an outer surface that is green with or without yellow stripes is the equipment-grounding conductor. If repair or replacement of the electric cord or plug is necessary, do not connect the equipment-grounding conductor to a live terminal.

4. Check with a qualified electrician or service personnel if the grounding instructions are not completely understood, or if in doubt as to whether the tool is properly grounded.

5. Use only 3-wire extension cords that have 3-prong grounding plugs and 3-pole receptacles that accept the tool's plug.

6. Repair or replace damaged or worn cord immediately.

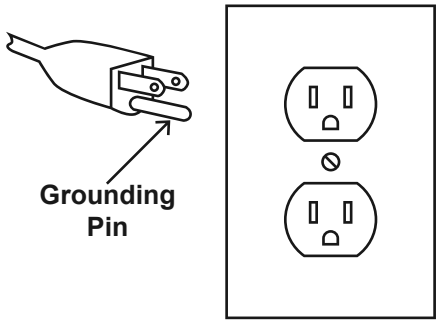

125 VAC 3-Prong Plug and Outlet
(for up to 125 VAC and up to 15 A)

7. This tool is intended for use on a circuit that has an outlet that looks like the one illustrated above in **125 VAC 3-Prong Plug and Outlet**. The tool has a grounding plug that looks like the plug illustrated above in **125 VAC 3-Prong Plug and Outlet**.

8. The outlet must be properly installed and grounded in accordance with all codes and ordinances.

9. Do not use an adapter to connect this tool to a different outlet.

Mini Lathe Safety Warnings

1. **FOR YOUR OWN SAFETY, READ AND UNDERSTAND THIS INSTRUCTION MANUAL BEFORE OPERATING LATHE.**

2. Wear ANSI-approved eye protection.

3. Do not wear gloves, necktie, or loose clothing while operating the Lathe.

4. Tie back long hair. Long hair in a ponytail needs to be secured so there is no risk of entanglement.

5. Tighten all locks before operating.

6. **DO NOT OPERATE WITH ANY GUARD DISABLED, DAMAGED, OR REMOVED. Moving guards must move freely and close instantly.**

7. Rotate workpiece by hand before applying power.

8. Rough out workpiece before installing on faceplate.

9. Do not mount split workpiece or one containing knot.

10. Use lowest speed when starting new workpiece.

11. Do not reverse motor direction while the lathe is in motion.

12. Do not clear chips by hand or when lathe is running. Use a brush to sweep chips away after the tool has come to a complete stop.

13. Select the proper tool for the job. Using the correct tool for the job produces a better finish and minimizes strain on the lathe.

14. The use of accessories or attachments not recommended by the manufacturer may result in a risk of injury to persons. When servicing, use only identical replacement parts.

15. Support pieces extending beyond the headstock so they cannot cause injury to the operator, bystanders or lathe. Turn supported long stock at slower RPM's.

16. Use a chuck cradle or piece of plywood to protect the precision ground ways and your hands when servicing chucks.

17. Check that the workpiece, tool, tool post, chuck and saddle all have adequate clearance before starting the lathe.

18. Check that no part of the tool, tool holder, compound slide, cross slide, or carriage will contact the chuck during operation.

19. Use the appropriate feed and speed rates for the project.

20. Allow the lathe to reach its full speed before beginning a cut.

21. Only use safety equipment that has been approved by an appropriate standards agency. Unapproved safety equipment may not provide adequate protection. Eye protection must be ANSI-approved and breathing protection must be NIOSH-approved for the specific hazards in the work area.

22. Industrial applications must follow OSHA guidelines.

23. Maintain labels and nameplates on the tool. These carry important safety information. If unreadable or missing, contact Harbor Freight Tools for a replacement.

24. Avoid unintentional starting. Prepare to begin work before turning on the tool.

25. People with pacemakers should consult their physician(s) before use. Electromagnetic fields in close proximity to heart pacemaker could cause pacemaker interference or pacemaker failure.

26. The warnings, precautions, and instructions discussed in this instruction manual cannot cover all possible conditions and situations that may occur. It must be understood by the operator that common sense and caution are factors which cannot be built into this product, but must be supplied by the operator.

Vibration Safety

This tool vibrates during use. Repeated or long-term exposure to vibration may cause temporary or permanent physical injury, particularly to the hands, arms and shoulders. To reduce the risk of vibration-related injury:

1. Anyone using vibrating tools regularly or for an extended period should first be examined by a doctor and then have regular medical check-ups to ensure medical problems are not being caused or worsened from use. Pregnant women or people who have impaired blood circulation to the hand, past hand injuries, nervous system disorders, diabetes, or Raynaud's Disease should not use this tool. If you feel any medical or physical symptoms related to vibration (such as tingling, numbness,

and white or blue fingers), seek medical advice as soon as possible.

2. Do not smoke during use. Nicotine reduces the blood supply to the hands and fingers, increasing the risk of vibration-related injury.
3. Wear suitable gloves to reduce the vibration effects on the user.
4. Use tools with the lowest vibration when there is a choice between different processes.
5. Include vibration-free periods each day of work.
6. When cutting do not apply too much pressure to the workpiece. Let the tool do the work.
7. To reduce vibration, maintain the tool as explained in this manual. If any abnormal vibration occurs, stop use immediately.



SAVE THESE INSTRUCTIONS.

SPECIFICATIONS

Motor	120 VAC / 60 Hz / 3/4 HP
Speed Ranges	0 - 1100 RPM (Low) 0 - 2500 RPM (High)
Fuse Type	Fast Acting 4 amp mini glass (F4AL250VP)
Belt	Lx136 Pitch: 1.5mm Teeth: 70
Drive	Gear and Belt
Swing Over Bed	7″
Dist. Between Centers	10″
Swing Over Cross Slide	2-1/8″
Swing Over Saddle	4-1/2″
Swing Over Gap	7″
Max. Tool Bit Size	5/16″
Compound Travel	2-3/4″
Carriage Travel	6-1/2″
Cross Slide Travel	2-3/4″
Work Tolerance	0.005″
Bed Dimensions	15-7/8″ L x 3-1/4″ W
Tailstock Taper	MT#2
Threads	18 threads from 12 - 52 TPI
Through Chuck Capacity	5/8″

Chuck Dia. (mm)	Internal Jaws		External Jaws
80	A - A1	B - B1	C - C1
	5/64″ - 1-1/8″	1″ - 2-3/4″	7/8″ - 2-1/2″

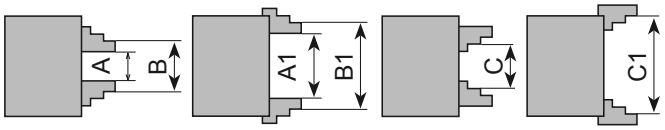

Packing List

	Description	Qty	Part #(s)
1	Main unit	1	
2	External Chuck Jaw Set	3 jaws	166
3	Chip Tray	1	126
4	Chuck Key	1	167
5	4 A Fuse	1	314
6	Gear: 30, 35, 40, 40, 45, 50, 55, 57, 60, 65 T	10 gears	157-165
7	Spanner Wrench: 8-10, 14-17	2 wrenches	312, 313
8	Hex Key Wrench Set: 3, 4, 5, 6	4 wrenches	311
9	Oil can	1	310
10	MT:2 Live Center	1	143
11	Rubber Foot	4	125
12	Rubber Foot Mounting Screw	4	67
13	Knob	2	85
14	Manual	1	317

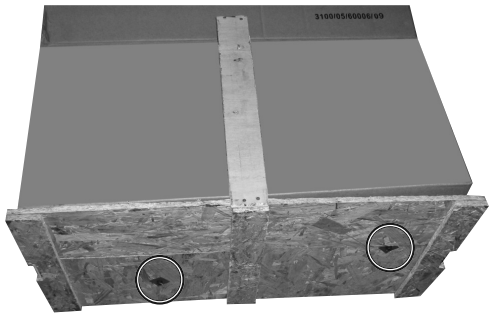

Shipping Bolt Locations

To remove the lathe from the packing crate, remove both bolts on the crate bottom as shown above.

Many components need to be installed before use. **It is ESSENTIAL that both guards (found in separate boxes within the main box) are installed before connecting power.**

Note: Wipe off protective grease from the lathe before using.

GENERAL MINI LATHE COMPONENTS

Note: Refer to the parts list and diagram at the end of this manual for complete part number listings and locations. See the following page for a description of the major components.

Part	Description
1	Bed Way
2	Chuck
33	H/L Speed Gear Shift Lever
35	Feed Direction Selector
53	Gear Drive Cover
79	Automatic Feed Handle
84a	Tailstock Quill Control Wheel
84b	Feed Control Wheel
86a	Cross Slide Crank
86b	Compound Rest Crank
100	Cross Slide
105/108	Compound Rest (A and B)
112	Tool Post
124	Power Cord

Part	Description
126	Chip Tray
129	Lead Screw
138	Tailstock
143	Live Center
146	Tailstock Quill Fix Holder
151	Motor Cover
153	Rear Splash Guard
178	Power Switch
179	Fuse Holder
180	Speed Control Knob
181	Forward-Off-Reverse Switch
268	Tailstock Set Screw
302	Thread Dial Indicator

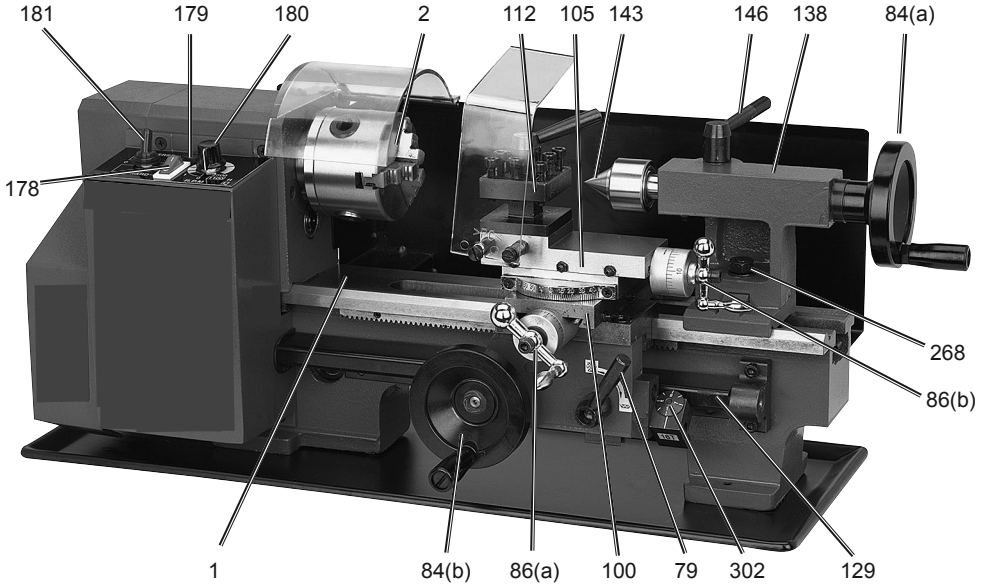

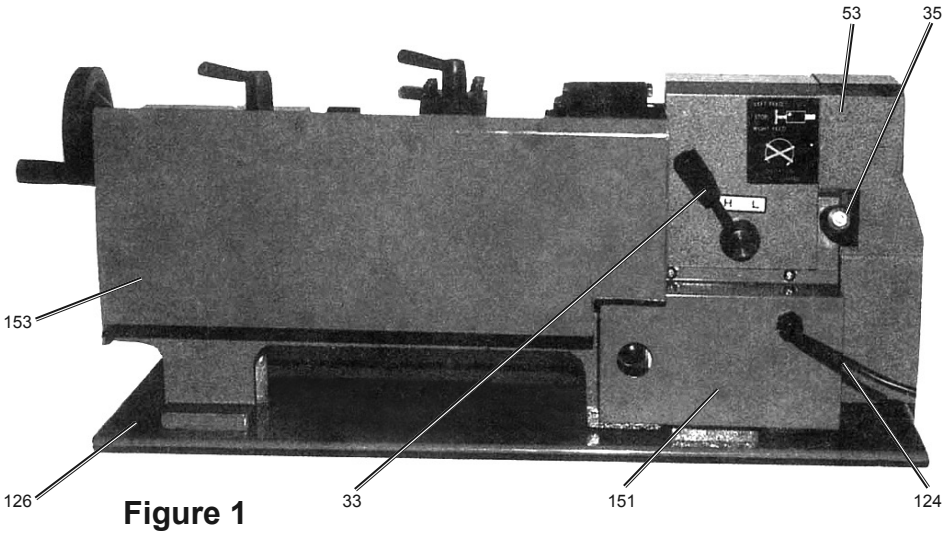

Figure 1

POWER CONTROLS OVERVIEW

Controls on the Front of the Lathe

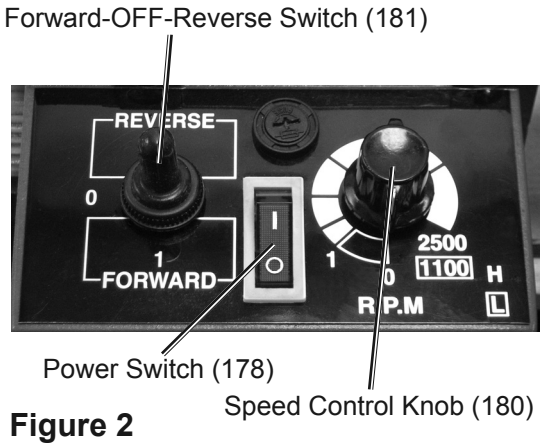

Figure 2

Power Switch (178)

Turns on and off power to the motor. When the Power Switch is lit, the motor is on.

Forward-OFF-Reverse Switch (181)

Changes the Spindle (3) (Chuck (2)) rotation from Forward (clockwise), to OFF (no rotation), to Reverse (counterclockwise).

DO NOT change the Forward-OFF-Reverse Switch direction while the lathe is running.

Speed Control Knob (180)

Adjusts the Spindle (3) speed from 0 to 2500 RPM.

Check that this knob is at 0 before turning on the Lathe.

Note: The Speed Control Knob (180) is dependant on the H/L Gear Shift Lever (33). When the H/L Gear Shift Lever is in the Low setting, the Speed Control Knob runs from 0 to 1100 RPM. When the H/L Gear Shift Lever is in the High setting, the Speed Control Knob runs from 0 to 2500 RPM.

Controls on the Back of the Lathe

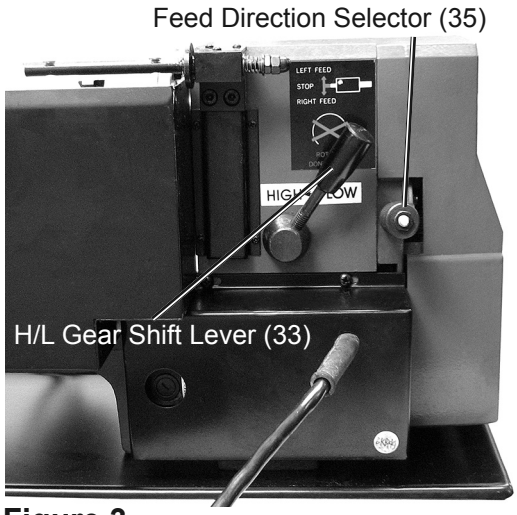

Figure 3

Feed Direction Selector (35)

Changes the Lead Screw (129) rotation from Forward (toward the Chuck) to Neutral (no rotation), to Reverse (away from the Chuck).

DO NOT Change the Feed Direction Selector while the Lathe is running.

H/L Gear Shift Lever (33)

Changes the spindle speed range from High (0 - 2500 RPM) to Low (0-1100 RPM).

DO NOT adjust the H/L Gear Shift Lever while the Lathe is running.

LATHE COMPONENTS OVERVIEW

Following are brief descriptions of major components of the Mini Lathe.

Bed Way (1) - The Bed Way is the base of the work area under the Chuck and Tailstock. It is where the Tailstock and Compound Rest are attached and what they slide along.

Chuck (2) - The Chuck holds the three Jaws (two sets included) which clamp the work piece in place.

Compound Rest (105/108) - The Compound Rest and Compound Slide (100) work together to adjust the position of the Cutting Tool to the desired location.

Jaws (166 & 168) - The Jaws fit into the Chuck (2) and hold the workpiece in place. There are a set of internal Jaws (168), which fit inside the workpiece and External Jaws (166) which fit on the outside of the workpiece.

Lead Screw (129) - The Lead Screw controls automatic feeding. In thread cutting or when you want to cut into the workpiece automatically, you engage the Lead Screw with the Feeding Direction Selector (35) and use the Automatic Feed Handle (79). Keep track of the cut with the Thread Dial Indicator (302).

Live Center (143) - The Live Center fits into the Tailstock Quill (142) on the Tailstock (138) and helps to hold the end of the workpiece that is opposite from the Chuck (2). A live center spins with the workpiece and chuck, while a dead center (sold separately) does not spin.

Tailstock (138) - The Tailstock holds the Tailstock Quill (142) which is used to hold various tools (sold separately) or a Live Center (143).

Thread Indicator Dial (302) - The Threading Dial is used to measure the number of rotations of the Lead Screw when thread cutting. It eliminates the need to reverse the lathe and return the carriage to the starting point each time a successive threading cut is taken. You must adjust the Threading Dial so that it engages the Lead Screw (129) in order for it to function.

Threading Gears (45,50, 59, 157-165) - The Threading Gears are positioned under the Gear Drive Cover (53) on the far left side of the Lathe. They are used in various configurations for thread cutting.

Tool Post (112) - The Tool Post sits on the top of the Compound Rest (105/108) and is used to hold various cutting tools by clamping them in place with Tool Post Bolts (110).

ASSEMBLY INSTRUCTIONS

Note: For additional information regarding the parts listed in the following pages, refer to the Assembly Diagram near the end of this manual.

1. ⚠ **WARNING!** Make sure the Power Switch of the tool is in its "OFF" position and that the tool is unplugged from its electrical outlet before making any adjustments to the tool.

2. Clean off the protective grease on the Mini Lathe.

Attaching Rubber Feet or Installing to Workbench

Note: Mount or place the Lathe on a sturdy workbench or table, with good lighting, at a height that allows you to comfortably work without back strain.

The Lathe can be mounted permanently to a workbench or used with it's included Rubber Feet (125) on a tabletop.

To Attach the Rubber Feet:

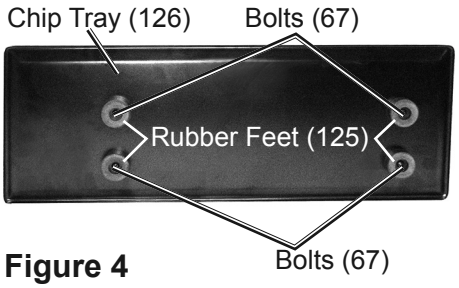

Figure 4

To attach the Rubber Feet to the bottom of the Lathe, unthread the Bolts (67) from the bottom of the Chip Tray (126). Slide the Rubber Feet onto the Bolts and re-thread them into the bottom of the Lathe through the Chip Tray holes. Tighten securely.

To Mount the Lathe to a Workbench:

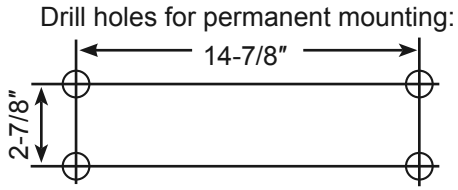

Figure 5

Unthread the Bolts (67) from the bottom of the unit. Measure and drill holes in the workbench. Use appropriate length M6-1 bolts and washers (sold separately) to secure the Lathe and Chip Tray to the workbench.

Installing Handwheel Handles

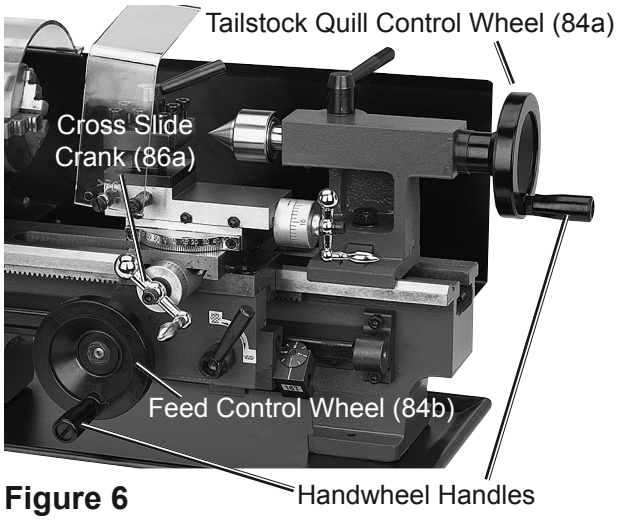

Figure 6

1. To install the Handwheel Handles on the Tailstock Quill Control Wheel (84a) and the Feed Control Wheel (84b), use a flathead screwdriver and a 14mm open end wrench to thread the handles onto the wheels.

2. For packaging purposes, the Cross Slide Crank (86a) is shipped from the factory facing backwards. Adjust the Cross Slide Crank (86a) to face forward using a 5mm Hex Wrench (part of 311) to unthread the Cap Screw (52) and turn the Cross Slide Crank around. Tighten the Cap Screw securely.

Installing Guards

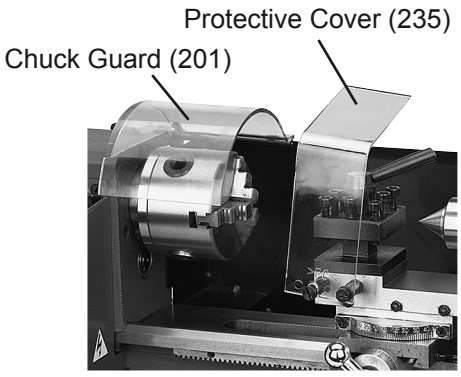

Figure 7

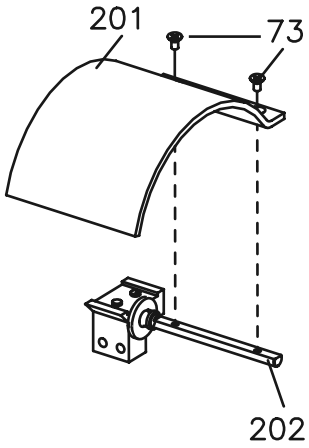

Figure 8

1. To install the Chuck Guard (201), remove the two Screws (73) on the Hinge (202). Attach the Chuck Guard (201) to the Hinge using the Screws. The Chuck Guard should be aligned so that it covers the Chuck (2) when swung down over it.

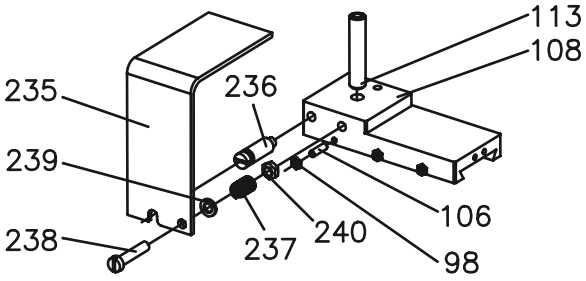

Figure 9

2. To install the Protective Cover (235), remove the Screw (238) from the Compound Rest (108). Slide the Screw (238) through the Protective Cover (235), Washer (239), Spring (237), and Nut (240). Then, thread the Screw (238) into the Compound Rest (108). Slide the notch in the Protective Cover (235) over the end of the Slotted Screw (236).

SET UP

Initial Test Run

Before further set-up of the Lathe, check that the power components are working properly by performing the following test run.

1. Check that all loose parts and tools are out of the way and nothing will interfere with the Chuck (2) when it rotates.

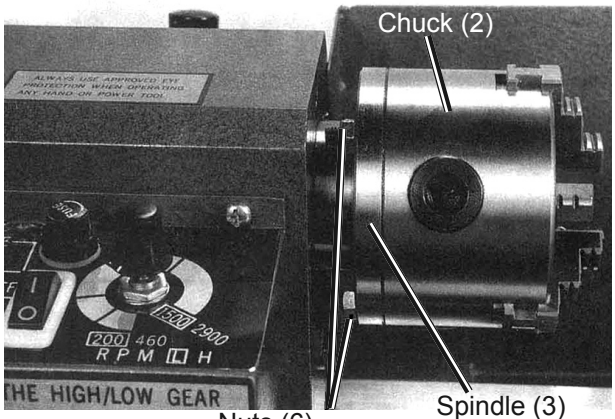

Figure 10

2. Turn the Chuck by hand and check that it rotates freely.

3. Check that the three Nuts (6) on the Chuck are tight.



Figure 11

4. On the back of the Lathe, set the H/L Gear Shift Lever (33) to low and the Feeding Direction Selector (35) to the middle (Neutral).

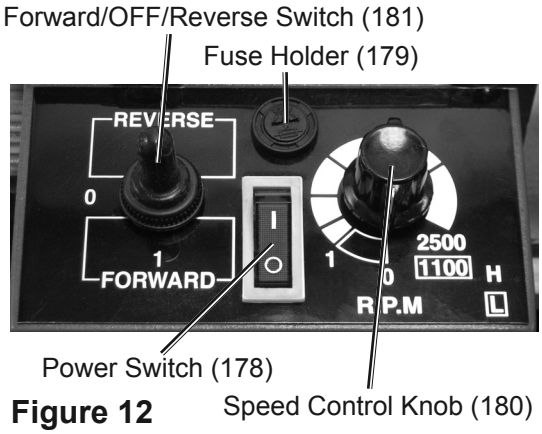

Figure 12

5. On the front of the Lathe, make sure the Forward/OFF/Reverse Switch (181) is set to the OFF position.

6. Turn the Speed Control Knob (180) to zero.

<u>WARNING:</u> BEFORE TURNING ON THE MINI LATHE EACH TIME IT IS TO BE USED, THE SPEED CONTROL KNOB (180) MUST BE SET TO ZERO.

7. Plug in the electrical cord and turn the Forward/OFF/ Reverse Switch to Forward.

8. Turn the Power Switch (178) to the ON position.

9. Gently rotate the Speed Control Knob clockwise past the 1 to the first setting. The speed will increase the further the Knob is turned. The Lathe should run smoothly with little or no vibration or friction sounds when it starts. If you notice unusual sounds or vibrations, turn off the Power Switch, turn the Speed Control Knob to 0, unplug the machine and have the problem corrected before further use.

10. If the Lathe is running smoothly, continue running it for several minutes, gradually increasing the Speed

Control Knob setting, and letting it run for several minutes at each setting before increasing to the next level. Continue until you've run the Lathe all the way up to the highest setting.

11. Turn the Power Switch OFF and wait for the Lathe to come to a complete stop.

12. Repeat the process with the H/L Gear Shift Lever at the High setting. Then repeat at both the Low, then High setting with the Forward/OFF/Reverse Switch in the Reverse position.

<u>WARNING:</u> THE MINI LATHE MUST BE COMPLETELY STOPPED BEFORE CHANGING THE FORWARD/OFF/ REVERSE SWITCH (181), THE FEED DIRECTION SELECTOR (35), OR THE GEAR SHIFT LEVER (33).

13. Turn the Power Switch off, the Speed Control Knob to 0 and unplug the Lathe.

14. Check the Compound Rest Crank (86b) and the Cross Slide Crank (86a) to see that the Compound Rest (105/108) and Cross Slide work properly. If they are too tight or too loose, adjust the Gibs (94/107) located at both crank sides (See Gib Adjustments in the Maintenance Section of this manual).

Replacement of Chuck

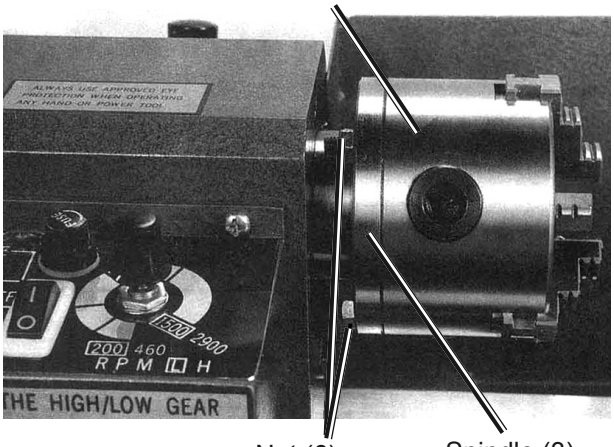

Figure 13

1. When replacing the Chuck, place a cloth or a piece of wood on the bedway at the bottom of the chuck. This step will help avoid damage to the bedway caused by accidentally dropping the chuck.

2. To replace the chuck, loosen the 3 Nuts (6) as shown in Figure 13, remove the old Chuck and replace with a new chuck. Replace and tighten the Nuts.

Replacement of Jaws

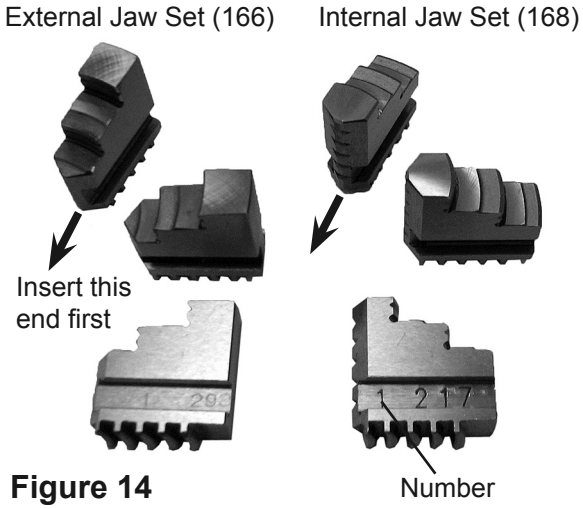

Figure 14

The Lathe comes with two sets of Jaws: an External Jaw Set (166) and an Internal Jaw Set (168). Each piece is numbered and fits into the Chuck grooves with the corresponding number

in the Chuck groove. The Jaws are designed to work as complete sets. Do not mix pieces from one set with the other set when installing in the Chuck.

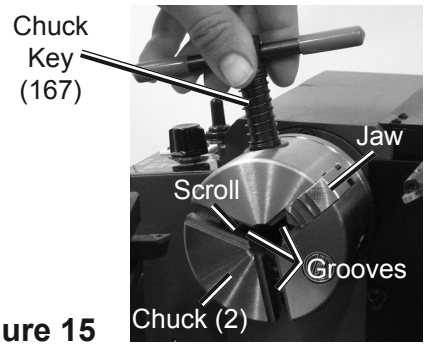

Figure 15

The jaws are held in place by a spiralled scroll inside the Chuck which rotates around the center of the chuck with the Chuck Key. As the scroll rotates, it hooks into the jaw ridges, then pulls each Jaw toward the center of the Chuck as the spiral of the scroll rotates around the Chuck.

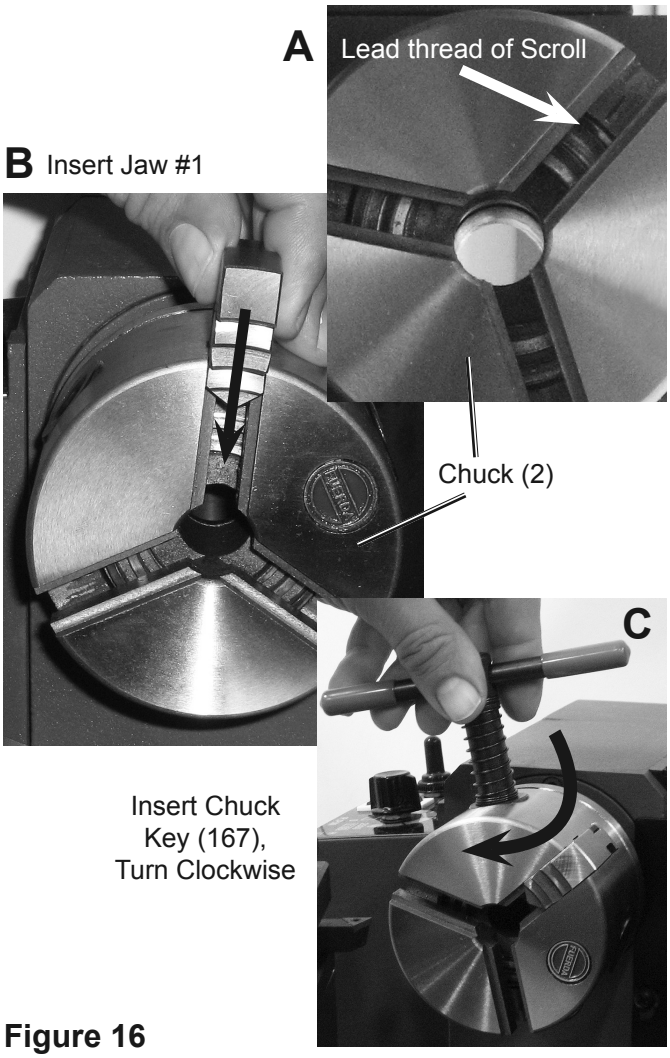

Figure 16

To replace the Jaws:

a. Unplug the Lathe.

b. Place a towel under the Chuck to protect the Bed Way (1) from any Jaws that may be dropped. Carefully remove any Jaws by inserting the Chuck Key (167) into the side of the Chuck, turning it counterclockwise, and sliding each Jaw out of it's slot as it becomes free.

c. Look at the Chuck so you can see into the grooves, and find the groove marked #1. Rotate the Chuck Key clockwise until you see the lead thread of the Scroll in groove #1 (A in Figure 16).

d. Slide Jaw #1 into the groove and rotate the Chuck Key counterclockwise

slightly, then clockwise, to engage the lead thread into the Jaw (B and C in Figure 16).

e. Slide Jaw #2 into the next groove and continue turning the Chuck Key clockwise to advance the lead thread into the next Jaw. Slide Jaw #3 with the same procedure as Jaw #2.

Note: When mounting a workpiece, it is recommended that all three jaws are loosened at the same time. This will protect the threads inside.

Compound Rest Adjustment

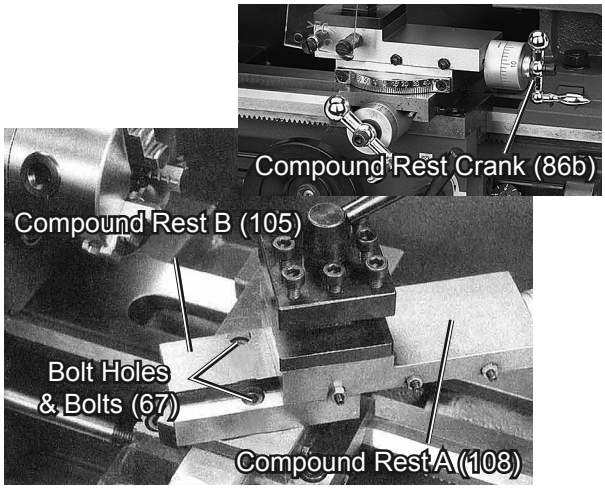

Figure 17

To adjust the angle of Compound Rest:

a. Turn the Compound Rest Crank (86b) counterclockwise to slide the top section of the Compound Rest (Compound Rest A (108)) so that the two screw holes are exposed on the lower section of the Compound Rest (Compound Rest B (105)).

b. Turn the two Bolts (67) counterclockwise to loosen them.

c. Swivel the Compound Rest to the desired angle.

d. Tighten the two Screws.

Tailstock Adjustments

The Tailstock (138) holds tools, such as the Live Center (143), which are used with the Chuck Jaws (168) to hold work pieces in place.

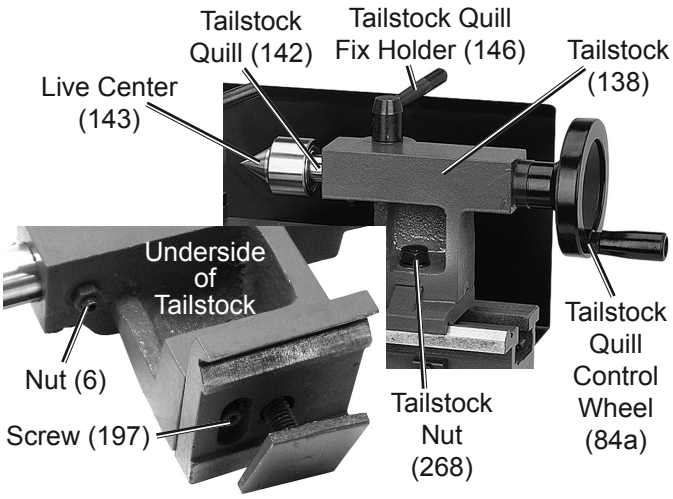

Figure 18

1. Use the Tailstock Quill Control Wheel (84a) to position the Live Center. Turning the Wheel counterclockwise slides the Live Center away from the Chuck, turning it clockwise slides it toward the Chuck. It can be adjusted up to approximately 2″.

2. The Tailstock Quill (142) holds the Live Center in place. To remove or replace the Live Center, continue turning the Tailstock Quill Control Wheel counterclockwise until the Live Center begins to slide out of the Quill. Insert the Live Center or other tool (sold separately) into the Quill and turn the Tailstock Quill Control Wheel clockwise to lock the tool in place.

3. You may need to slide the Tailstock closer to, or further away from, the Chuck before adjusting the Live Center. To do so, loosen the Tailstock Nut (268), adjust the Tailstock as needed, then re-tighten the Nut. Use this method when replacing the Tailstock as well.

4. The Tailstock Quill is locked in place with the Tailstock Quill Fix Holder (146). Turn it clockwise to lock the Quill in place and counterclockwise to loosen it. Tighten the Nut (6) underneath the Quill to eliminate any play in the Quill.

5. To adjust the Tailstock slightly to the right or left of center, loosen the Screw (197) on the bottom of the Tailstock. Adjust, then tighten.

Tool Post Adjustment

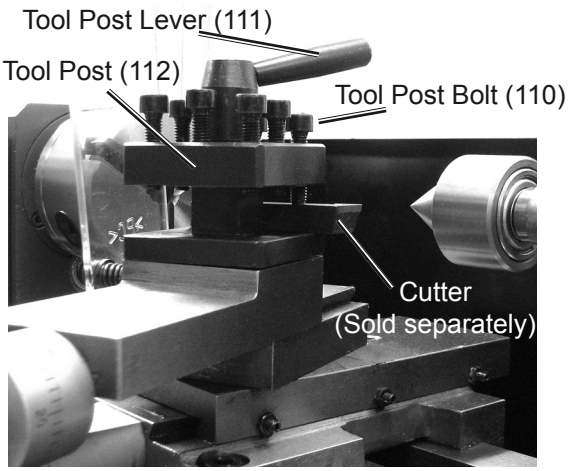

Figure 19

To adjust the position of the Tool Post (112):

a. Turn the Tool Post Lever (111) counterclockwise to loosen the Tool Post.

b. Rotate the Tool Post as needed.

c. Hold the Tool Post in position while turning the Tool Post Lever clockwise, tightening the Tool Post in place.

To install a cutting tool (Sold separately):

a. Use the 1/4″ Hex Wrench (part of 311) to raise enough Tool Post Bolts (110) to hold the tool. Use at least two Tool Post Bolts to hold the tool in place (Turn counterclockwise to raise).

b. Slide the tool under the raised screws and hold it while lowering the screws until they are securely holding the tool in place.

Automatic Feeding

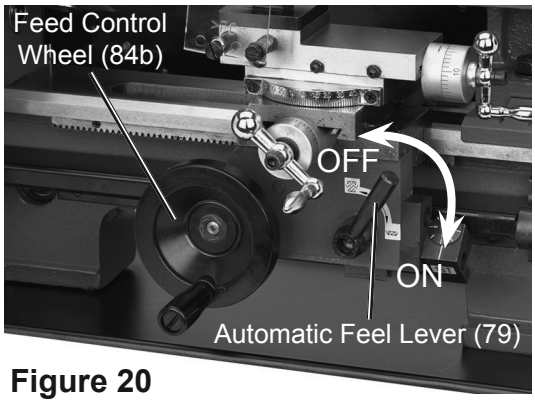

Figure 20

The Automatic Feed Lever (79) controls whether the Carriage (93) moves automatically, or manually.

When the Lever is Up, the Lathe is in Manual mode. Use the Feed Control Wheel (84b) to slide the Carriage to the right or left.

When the Lever is Down, the Lathe is in automatic mode. The carriage will automatically move to the right or left depending on whether it is set to forward or reverse.

Note: The Feed Control Wheel (84b) is locked when the automatic feed is ON.

Threading Dial

The Threading Dial (65) is used to align and track the threads cut in a threading project. It can only be used when the Lathe is set to automatic feed (See previous section on Automatic Feeding). To set up the Threading Dial:

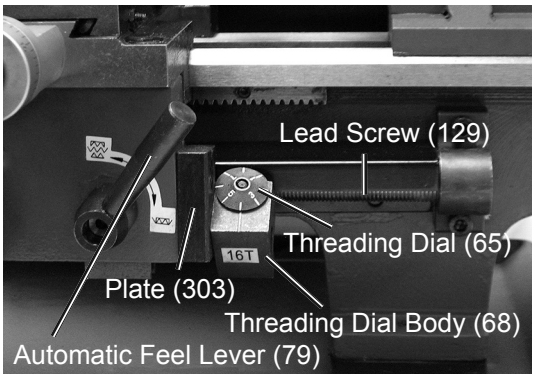

Dial Disengaged - Rotate up to engage:

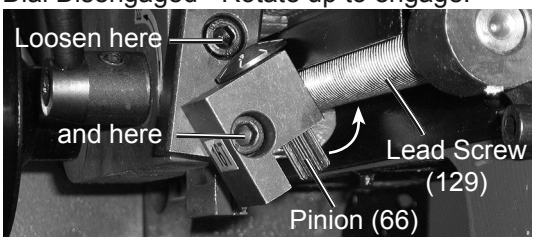

Dial Engaged:

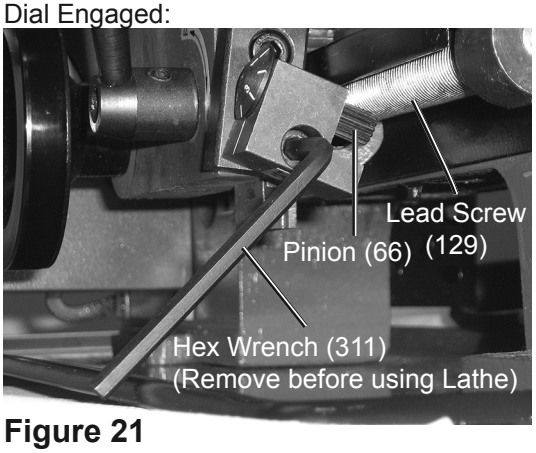

Figure 21

a. Adjust the dial to line up with one of the numbers or lines as needed (Consult advanced information about cutting threads with mini-lathes to determine where to line up the dial for your threading project).

b. Use the 5mm Hex Wrench (part of 311) to loosen the Plate (303) and the Threading Dial Body (68).

c. Rotate both pieces so the Pinion (66) on the back side of the Threading Dial Body makes contact with the Lead Screw (129) ("Dial Engaged" in Figure 21, bottom photo).

d. Tighten both pieces in place and remove the Wrench.

e. To dis-engage the Threading Dial Body when not in use, loosen the Plate and rotate the Dial away from the Lead Screw (129), then retighten the Plate.

OPERATION

Start up

Note: Not following this start-up procedure will cause the Lathe to immediately shutdown. This is an overload protection feature for the circuit board and motor.

1. Begin with the Lathe unplugged.
2. Install the required Jaws (166 or 168) into the Chuck (2).
3. Set up the work area as needed for your project. You will need to:
   a. Secure the workpiece in place.
   b. Install the cutting tool (sold separately) in the Tool Post (112).
   c. Set the Automatic Feed Lever (79) to manual or automatic.
   d. If threading, engage the Threading Dial (65) and set it as needed for the project.
   e. Move the cutting tool in place using the Cross Slide (100) and Compound Rest (105/108) Cranks (86a and 86b).

Note: Before beginning any machining process, remove backlash from the Cross Slide (100) and/or Compound Rest (105/108) Cranks (86a and 86b) and reset the Dials (87) to zero.

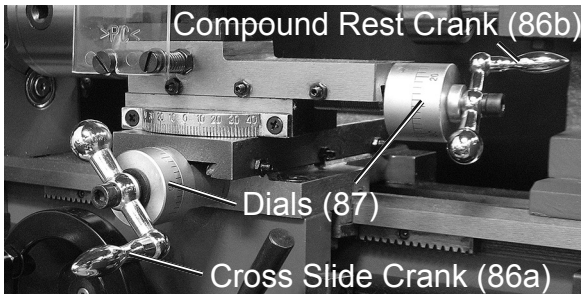

Figure 22

To do this, begin rotating the Crank in the desired direction until all play is gone. Hold the Crank in place with one hand and rotate the Dial (87) to zero. Repeat each time before using a Crank in either direction when you need precise measurements.

4. Adjust the Controls:

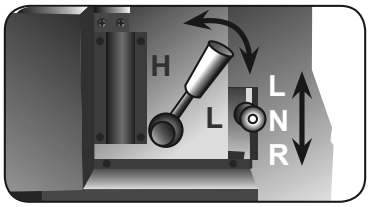

Figure 23

   a. On the back of the Lathe, set the Spindle Speed with the H/L Gear Shift Lever (33) and the feed direction with the Feed Direction Selector (35).



Figure 24

   b. On the front of the Lathe, make sure that the Main Power Switch (178), Forward/OFF/Reverse Switch (181) and the variable Speed Control Knob (180) are in their off positions. The variable Speed Control Knob has an actual “0/Off” position and will “click” when placed in the “Off” position.

Note: The Lathe will not start-up unless the Variable Speed Control Knob is turned to the “0/Off” position before restarting. Attempting to start the lathe with the Speed Control Knob (180) set at any speed other then “0/Off” or attempting to start the lathe out of sequence, will cause the fuse to blow.

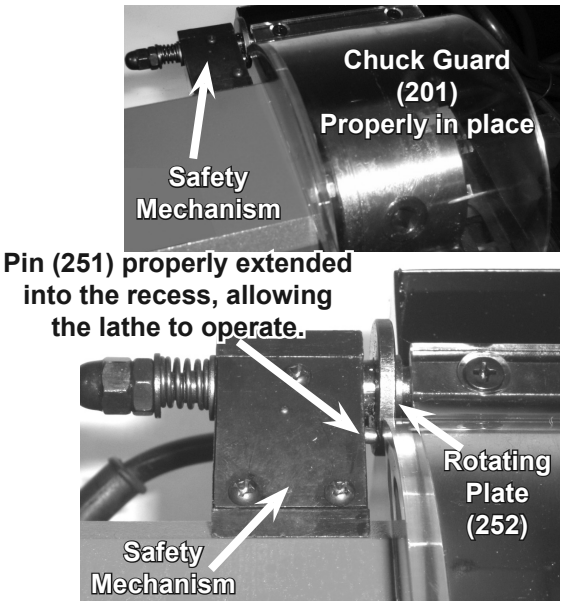

Figure 25

5. **The Chuck Guard (201) has a safety interlock and the Lathe will not operate unless the guard is properly in place.** Install the guard if not already done so. Check to ensure that the Guard (201) is in its operating position over the Chuck (2). The Pin (251) must be correctly seated in the recess in the Rotating Plate (252) for the Lathe to work.

6. Plug in the Lathe.

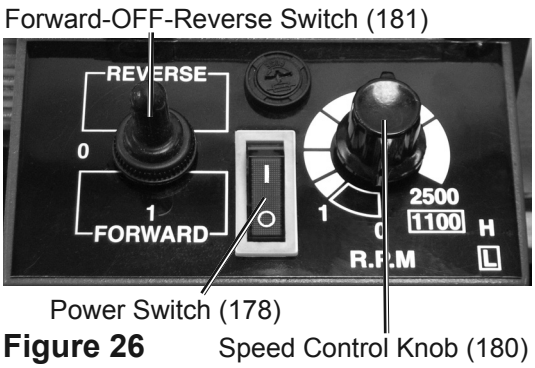

Figure 26

7. Move the Power Switch (178) to the "On" position (switch will turn Red) and place the Forward-Off-Reverse Switch (181) in the direction needed.

8. Move the Variable Speed Control Knob (180) to the needed operating speed to start the Lathe.

To Stop the Lathe

1. Turn the Speed Control Knob (180) to 0.
2. Move the Forward-OFF-Reverse Switch to OFF.
3. Turn the Power Switch (178) OFF.
4. Unplug the Lathe when not in use.

Basic Operations

WARNING: Make sure the Lathe power is off and the Lathe is unplugged before setting up a project or working near the Chuck (2).

Following are some of the basic operations used with the Lathe. It is recommended that you become familiar with mini lathe techniques before using this tool. Consult books on the subject and/or web page resources for your project before using this tool.

Holding a project between the Chuck (2) and the Live Center (143)

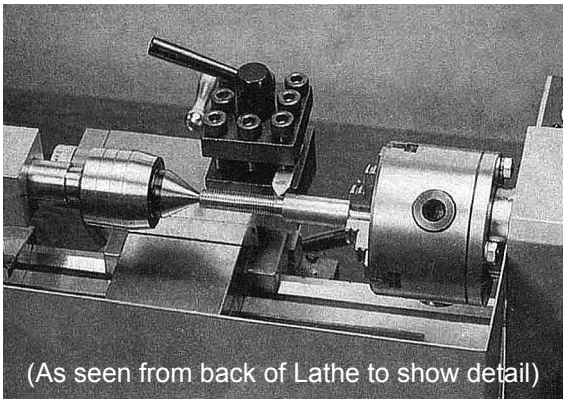

Figure 27

1. Use the chuck to hold the workpiece firmly. Then, use the Live Center (143) to fix the other end.

Note: If you change the Live Center to a drilling chuck (sold separately), you start your drilling immediately.

Face Cutting

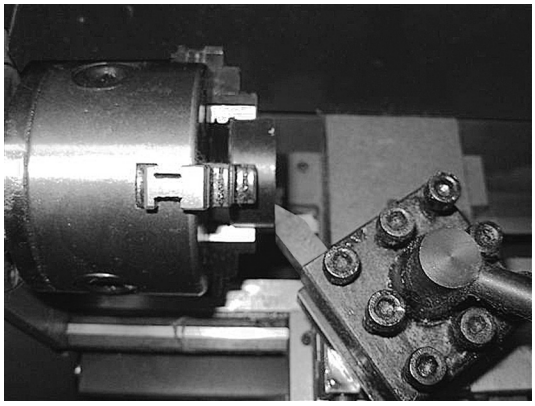

Figure 28

2. Use the chuck to hold the workpiece firmly, and the cutter positioned as shown above for face cutting. The edge of the cutter must be at the same height as the center.

Internal Cutting

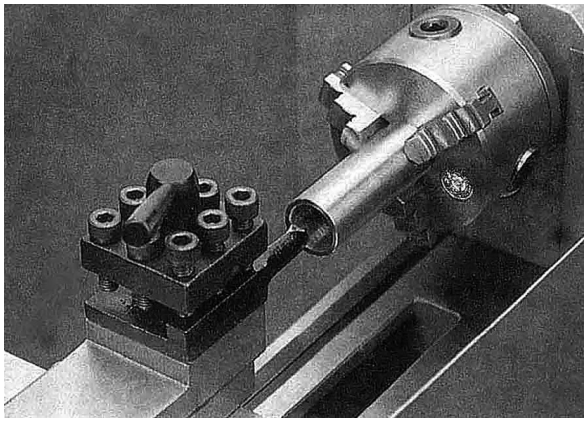

Figure 29

3. By changing the tool post angle and adjusting the compound rest, you can make internal cuts.

Bevel Cutting

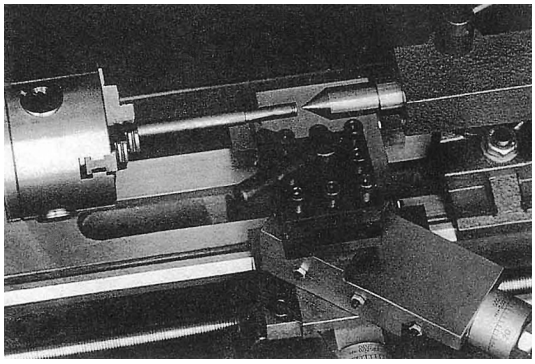

Figure 30

4. After adjusting the angle of the compound rest, you can make bevel cuts.

Threading Gears

By changing the gear set-up it is possible to cut any thread size. The factory set-up for Mini Lathe gears is as follows:

Motor end view of Lathe with Gear Drive Cover (53) removed:

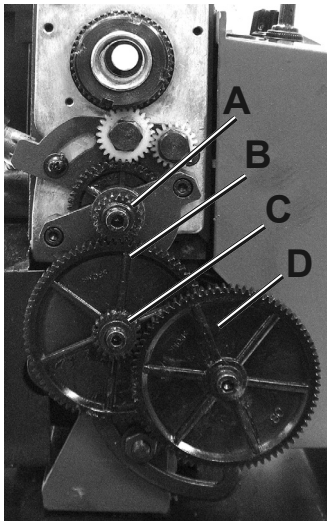

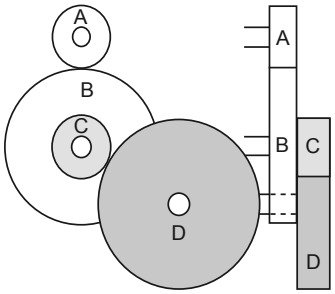

Positions A and C= 20T
Positions B & D= 80T

To change the thread size, use the gear box settings shown on the table that follows.

Thread Size Gear Settings

Threads Per Inch	Gear Box Stud			
	A	B	C	D
12	40			30
13	40	65	60	30
14	40			35
16	40			40
18	40			45
19	40	50	60	57
20	40			50
22	40			55
24	40			60
26	40			65
28	20			35
32	20			40
36	20			45
38	20	50	60	57
40	20			50
44	20			55
48	20			60
52	20			65

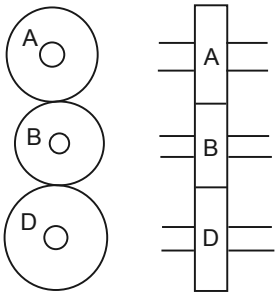

Example 1: To cut 12 threads per inch (see illustration above), use 40T in position A, 30T in position D, and put any other gear is position B to connect A and D.

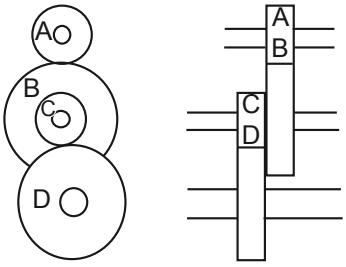

Example 2: To cut 38 threads per inch (see illustration above), use 20T in position A, 57T in position D, 50T in position B, and 60T in position C.

Automatic Feed and Threading Dial

Once the gears are set up, you will need to engage the Threading Dial (65) so you can monitor the number of threads cut.

Set up the Threading Dial as described in the **SET UP** section under **Threading Dial**.

Set the direction for the lathe with the Forward/OFF/Reverse Switch.

Turn the Power Switch on (the switch will light up).

Adjust the speed needed to cut the threads (consult advanced information about cutting threads with mini-lathes). Use the following table, also located on the front of the Lathe, to determine what number to start threading:

Indicator Table			
16T			
T.P.I.	**SCALE**	**T.P.I.**	**SCALE**
12	1, 3, 5, 7	26	1, 5
13	1	28	1, 3, 5, 7
14	1, 5	32	1 ~ 8
16	1 ~ 8	36	1, 3, 5, 7
18	1, 5	38	1, 5
19	1	40	1 ~ 8
20	1, 3, 5, 7	44	1, 3, 5, 7
22	1, 5	48	1 ~ 8
24	1 ~ 8	52	1, 3, 5, 7

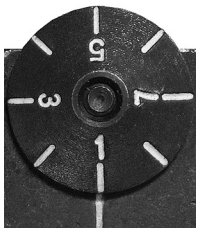

Move the cutting blade to the proper position. Pull down the Automatic Feed Lever (79) to start threading automatically.

To stop the automatic setting, pull up on the Automatic Feed Lever.

Remember: After thread cutting operation is complete, change back to the factory set-up gear setting:

Position A= 20T
Position B= 80T
Position C= 20T
Position D= 80T

MAINTENANCE AND SERVICING

Procedures not specifically explained in this manual must be performed only by a qualified technician.

⚠WARNING TO PREVENT SERIOUS INJURY FROM ACCIDENTAL OPERATION:
Turn the Power Switch of the tool to its "OFF" position and unplug the tool from its electrical outlet before performing any inspection, maintenance, or cleaning procedures.

TO PREVENT SERIOUS INJURY FROM TOOL FAILURE:
Do not use damaged equipment. If abnormal noise or vibration occurs, have the problem corrected before further use.

Cleaning, Maintenance, and Lubrication

1. **BEFORE EACH USE,** inspect the general condition of the tool. Check for loose hardware, misalignment or binding of moving parts, cracked or broken parts, damaged electrical wiring, and any other condition that may affect its safe operation.
2. **AFTER USE,** wipe external surfaces of the tool with clean cloth.
3. **⚠WARNING! If the supply cord of this power tool is damaged, it must be replaced only by a qualified service technician.**

Belt Inspection and Tensioning

1. Remove belt cover, if equipped.
2. Examine belt for cracks, tears in the backing, or other damage. Replace belt if damaged according to steps below:
   a. Loosen the motor mounting bolts and slide the motor towards the other pulley as far as possible.
   b. Slide the old belt off of the smallest pulley first, then remove it.
   c. Put the new belt around the larger pulley first, then around the smaller pulley.
   d. Move the motor away from the other pulley until it is properly tensioned according to the directions below. Tighten the motor mounting bolts.
3. Check and adjust belt tension according to the steps below:

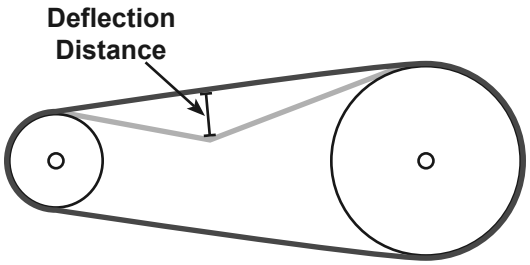

   a. Press on the center of the longest span on the belt with moderate finger pressure. Then measure the deflection distance, the distance that the belt moved. The belt should deflect about 1/4″.
   b. **If the belt deflects too much,** tighten belt by loosening the motor mounting bolts and moving the motor away from the other pulley slightly. Secure motor mounting bolts and retest tension. If the belt is too long to be properly tensioned, it must be replaced.
   c. **If the belt deflects too little,** loosen belt by loosening the motor mounting bolts and moving the motor towards the

other pulley very slightly. Secure motor mounting bolts and retest tension.

4. Before use, replace belt cover if equipped.

Gib Adjustments

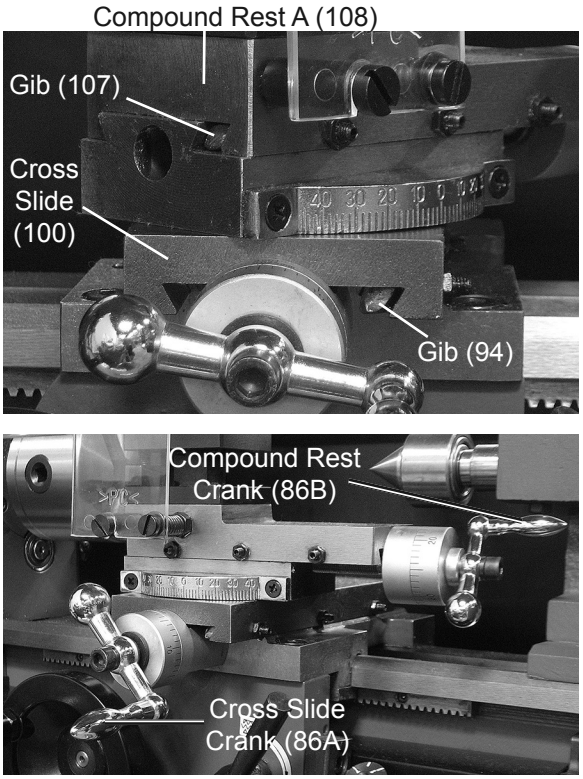

Figure 31

Adjusting the metal strips, or Gibs (94/107) on the underside of the Compound Rest A (108) and the Cross Slide (100) helps to snug up those units so they slide smoothly along the lathe. The goal is to tighten them enough so that the Compound Rest and Cross Slide do not have any unnecessary movement, but not so tight that they bind. It should not be difficult to turn the hand Cranks (86A/86B).

The Gibs become loose with use, so the Compound Rest A and Cross Slide should be checked periodically for any play. Readjust the Gibs as needed.

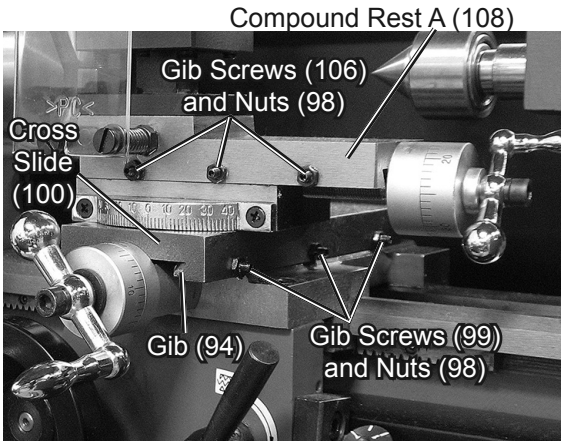

Figure 32

To make the adjustment:

1. Unplug the Lathe.
2. Working one set of three gib Screws and Nuts at a time, loosen the three Nuts (98) with a wrench (sold separately).
3. Holding the center Nut with the wrench, loosen or tighten the Center Screw (99 or 106) with a flat head screw driver (sold separately) and check the sliding movement. It should be even and smooth while removing any play. Adjust as needed, then, holding the Screw with the screw driver, tighten the Nut with the wrench.
4. Repeat step 3 for the two side Screw/Nut sets.

Tailstock Alignment

The Tailstock (138) needs to be adjusted for offset, then re-aligned before first use and any time the tool in the Tailstock is changed.

To align the Tailstock:

1. Center drill both ends of a 6″ long piece of round cold rolled stock. Set aside.
2. Turn a 60° point on a piece of scrap metal to make a dead center.
3. Place the dead center in the Tailstock.
4. Attach a Lathe Dog (part of 3448 - sold separately) the to 6″ piece from step 1 and mount between centers.
5. Turn approximately 0.010″ off of the diameter of the mounted workpiece.
6. Measure the workpiece with a micrometer at the Tailstock end and the Chuck end. Divide any difference by two. If it is thicker at the Chuck (2) end, move the tailstock away from you by the resulting amount. If it is thicker at the Tailstock end, move the Tailstock closer to you by the resulting amount.
7. Turn another 0.010″ off of the workpiece.
8. Repeat steps 5 and 6 as needed until there is no taper and/or the desired amount of accuracy is achieved.

Replacement of Carbon Brushes

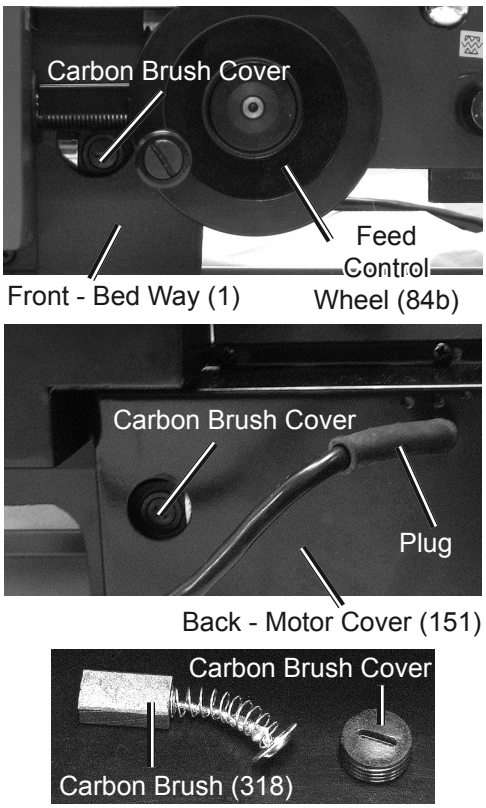

Figure 33

1. Unscrew the Brush Covers on the front and back of the machine using a flat head screwdriver (sold separately).
2. Pull the Brush out, noting the orientation of the old Carbon Brushes to prevent needless wear if they will be reinstalled.
3. The Carbon Brushes are approximately 5/8″ long. If either one is worn down by more than 1/2, replace both Brushes.
4. To clean old Carbon Brushes, rub the contact areas with a pencil eraser.
5. Carefully, without forcing them, insert the Carbon Brushes. Make sure the carbon portions of the brushes contact the motor armature and that the springs operate freely. If reinserting a used brush make sure it is in the same orientation to reduce wear.
6. Replace the Brush Covers.

Replacing the Fuse

The Fuse (314) is located in the Fuse Holder (179) on the Control Panel (122). The Fuse Holder is spring fitted.

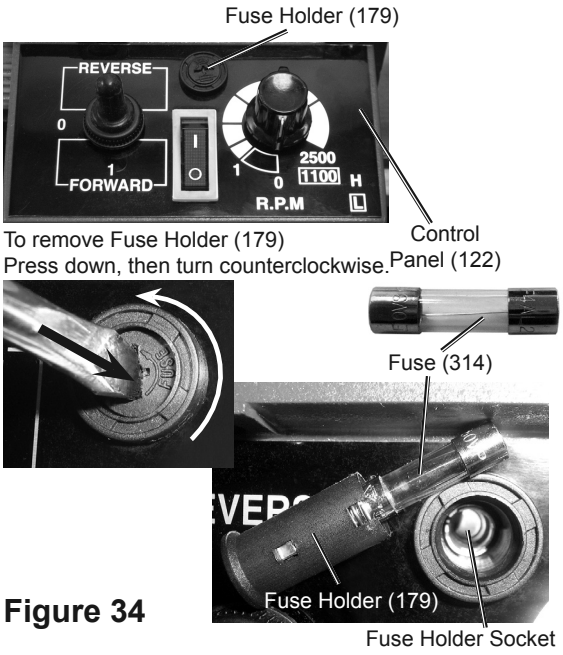

Figure 34

1. To Remove the Fuse Holder:
   a. Insert a flathead screwdriver (sold separately) into the slot in the Fuse Holder.
   b. Press down and turn counterclockwise 1/4 turn.
   c. Release pressure. Pull the Fuse Holder and Fuse out of the socket.
   d. Replace with a new 250V 4 amp mini glass fuse.
2. To Replace the Fuse Holder, slide it into the Fuse Holder Socket and press in with the screw driver, turning clockwise until the Fuse Holder clicks into place. Release pressure. The Fuse Holder will be flush with the rim of the Fuse Holder Socket.

Troubleshooting

Problem	Possible Causes	Likely Solutions
Motor and Electrical		
Lathe will not start or a breaker trips on startup.	1. Cord not connected. 2. No power at outlet. 3. Fuse has blown. 4. Chuck Guard safety interlock not in place. 5. PC Board (182) faulty. 6. Power Switch (178), Forward/ OFF/Reverse Switch (181) and/or Speed Control Knob (180) not working. 7. Internal damage or wear (such as wiring or motor.)	1. Check that cord is plugged in. 2. Check power at outlet. If outlet is unpowered, turn off tool and check circuit breaker. If breaker is tripped, make sure circuit is right capacity for tool and circuit has no other loads. 3. Check for short, replace fuse (see Maintenance section of this manual). 4. Rotate Pin (251) so it seats in Plate (252). 5. Inspect PC Board, have replaced if needed. 6. Check and replace as needed. 7. Have technician service tool.
Lathe stalls.	1. Incorrect workpiece material (metal). 2. Drive Pulleys slipping on shaft. 3. Removing too much material per pass.	1. Use metal suited for Lathe. 2. Tighten or Replace Pulleys (27,148). 3. Remove less material per pass.
Lathe operates slowly.	Extension cord too long or wire size too small.	Eliminate use of extension cord. If an extension cord is needed, use shorter/heavier gauge cord. See *Extension Cords* in *GROUNDING* section.
Performance decreases over time.	1. Accessory dull or damaged. 2. Carbon Brushes (318) worn or damaged.	1. Keep cutting accessories sharp. Replace as needed. 2. Replace Carbon Brushes (see Maintenance section of this manual).
Excessive noise or rattling.	1. Pulley setscrews missing or loose. 2. Motor fan hitting cover. 3. Belt (if equipped) too loose (slipping) or too tight (bearing damage). 4. Internal motor damage or wear.	1. Check Pulley keys and setscrews. Replace or tighten as needed. 2. Tighten fan cover or replace as needed. 3. Properly tension belt. 4. Have technician service tool.

Follow all safety precautions whenever diagnosing or servicing the tool. Disconnect power supply before service.

Problem	Possible Causes	Likely Solutions
Overheating.	1. Motor overloaded.	1. Reduce load on motor. Loosen drive Belt (see Maintenance section of this manual).
	2. Forcing machine to work too fast.	2. Allow machine to work at its own rate.
	3. Accessory dull or damaged.	3. Keep cutting accessories sharp. Replace as needed.
	4. Incorrect RPM or feed rate.	4. Check that RPM feed rate chart for appropriate rates for operation.
	5. Gear setup is too tight, gears bind.	5. Adjust gears so there is a small amount of play and the gears move freely and smoothly when the Chuck is rotated by hand.
	6. Blocked motor housing vents.	6. Wear ANSI-approved safety goggles and NIOSH-approved dust mask/respirator while blowing dust out of motor using compressed air.
	7. Motor being strained by long or small diameter extension cord.	7. Eliminate use of extension cord. If an extension cord is needed, use one with the proper diameter for its length and load. See *Extension Cords* in *GROUNDING* section.
Tool Performance		
Whole unit vibrates excessively while in use.	1. Workpiece unbalanced.	1. Re-center workpiece.
	2. Loose or damaged belt(s).	2. Tighten or replace the belt.
	3. Drive Pulleys not aligned.	3. Align Drive Pulleys (27, 148).
	4. Worn or broken gear.	4. Inspect gears and replace if needed.
	5. Chuck loose or unbalanced.	5. Tighten Nuts (6) or have a qualified technician rebalance Chuck.
	6. Spindle bearings worn.	6. Have a qualified technician replace bearings.
Uneven surface finish.	1. Incorrect RPM or feed rate for job.	1. Adjust RPM and/or feed rate.
	2. Dull or incorrect tool for job.	2. Sharpen and/or change tool.
	3. Gibs need adjustment.	3. Tighten Gibs (99 and/or 106) (See Gib Adjustment in Maintenance Section).
	4. Tool positioned too high.	4. Lower position of tool.
Unable to remove tapered tool from Tailstock.	Quill not fully seated in Tailstock or taper was inserted without first removing debris.	Turn quill handwheel until taper is forced out of quill. In the future make sure that the quill is fully seated in the tailstock and that the tool is wiped free of debris before installing.
Cross Slide, Compound Slide and/or carriage feed do not move smoothly.	1. Gibs need adjusting.	1. Loosen or tighten the Gib screws (99 and/or 106) (See Gib Adjustment in Maintenance Section).
	2. Handwheel or crank handles are too loose.	2. Tighten Handwheel and/or crank handle.
	3. Leadscrew worn or needs adjustment.	3. Tighten Leadscrew fasteners or have lead screw replaced by a qualified technician.

Follow all safety precautions whenever diagnosing or servicing the tool. Disconnect power supply before service.

Problem	Possible Causes	Likely Solutions
Difficulty moving Cranks of Cross Slide, Compound Slide and/or Carriage Handwheel.	1. Debris jammed around Gibs.	1. Remove Gibs, clean Gibs and all adjacent areas. Re-lubricate, then reinstall Gibs.
	2. Gibs adjusted too tight.	2. Loosen Gib screws (99 and/or 106) and lubricate bedways.
	3. Bedways need lubrication.	3. Lubricate bedways.
Cutting Tool or machine components vibrate excessively during operation.	1. Tool Post (112) too loose.	1. Clean any debris around Tool Post, then securely tighten Tool Post.
	2. Cutting tool jutting too far out of Tool Post or not secure.	2. Remove and reinstall cutting tool so that at least two screws hold it securely in place and no more than 1/3 of the tool extends beyond the Tool Post.
	3. Gibs need adjustment.	3. Adjust Gib screws (99 and/or 106).
	4. Cutting tool need sharpening.	4. Sharpen or replace tool.
	5. RPM or feed rate incorrect for job.	5. Check and adjust for recommended RPM and/or feed rate.
Finished piece uneven from one end to the other.	Chuck and Tailstock are not aligned.	Realign Tailstock following Tailstock Alignment instructions in the maintenance section of this manual.
Difficulty moving Chuck Jaws.	Debris lodged between Jaws and Chuck.	Remove Jaws. Clean and lubricate Chuck threads, then reinstall Jaws.
Carriage will not feed.	1. Gear or gears not engaged.	1. Check gears and adjust positions.
	2. Damaged gears.	2. Check and replace damaged gears.
	3. Feed Handle screw loose.	3. Tighten feed handle screw.

Follow all safety precautions whenever diagnosing or servicing the tool. Disconnect power supply before service.

PLEASE READ THE FOLLOWING CAREFULLY

THE MANUFACTURER AND/OR DISTRIBUTOR HAS PROVIDED THE PARTS LIST AND ASSEMBLY DIAGRAM IN THIS MANUAL AS A REFERENCE TOOL ONLY. NEITHER THE MANUFACTURER OR DISTRIBUTOR MAKES ANY REPRESENTATION OR WARRANTY OF ANY KIND TO THE BUYER THAT HE OR SHE IS QUALIFIED TO MAKE ANY REPAIRS TO THE PRODUCT, OR THAT HE OR SHE IS QUALIFIED TO REPLACE ANY PARTS OF THE PRODUCT. IN FACT, THE MANUFACTURER AND/OR DISTRIBUTOR EXPRESSLY STATES THAT ALL REPAIRS AND PARTS REPLACEMENTS SHOULD BE UNDERTAKEN BY CERTIFIED AND LICENSED TECHNICIANS, AND NOT BY THE BUYER. THE BUYER ASSUMES ALL RISK AND LIABILITY ARISING OUT OF HIS OR HER REPAIRS TO THE ORIGINAL PRODUCT OR REPLACEMENT PARTS THERETO, OR ARISING OUT OF HIS OR HER INSTALLATION OF REPLACEMENT PARTS THERETO.

PARTS LIST

Part	Description	Qty
1	Bed way	1
2	Chuck	1
3	Spindle	1
4	Stud M6 x 25	3
6	Nut M6	5
7	Key 5 x 40	1
8	Key 4 x 8	2
9	Set Screw M5 x 12	6
10	Cover	2
11	Ball bearing 80206	2
12	Spacer	2
13	Headstock casting	1
14	H/L gear 21T/29T	1
15	Spacer	1
16	Spur gear 45T	1
17	Nut M27 x 1.5	2
18	Set screw M5 x 8	1
19	Steel ball 5	2
20	Compression spring	3
21	Set screw M6 x 8	3
22	Retaining ring 12	2
23	Ball bearing 6201Z	2
24	H/L gear 12T/20T	1
25	Parallel key 4 x 45	1
26	H/L gear shaft	1
27	Pulley	1
28	Retaining ring 10	2
29	Timing belt L136	1
30	Shifting fork	1
31	Shifting arm	1
32	Shifting knob	1
33	H/L Speed Gear Shift Lever	1
34	Shifting grip	1
35	Feed Direction Selector	1
36	Handle mount	1
37	Spring	1
38	Indicator	1
39	Pinion 25T	1
40	Support screw	2
41	Pinion 20T	1
42	Fixed cover	1
43	Screw M6 x 20	2
45	Gear 45T	1
46	Shaft	1
47	Parallel key 3 x 8	1
48	Mount	1
49	Screw M5 x 18	2
50	Gear 20T	2
51	Washer M6	6
52	Cap Screw M6 x 8	2
53	Gear Drive Cover	1
54	Screw M5 x 45	2
55	Thread cutting chart	1
56	Screw M5 x 8	12
57	Washer M4	2
58	Bushing w/key	1
59	Gear 80T	2
60	Shaft	1
61	Support plate	1
62	Washer 8	3
63	Nut M8	3
64	Shaft	1

Part	Description	Qty
65	Threading Dial	1
66	Pinion 16T	1
67	Bolt M6 x 16	10
68	Threading Dial Body	1
69	Set screw M4 x 10	3
70	Apron	1
71	Gib strip	1
72	Washer	2
73	Screw M4 x 8	2
74	Shaft	1
75	Half nut base	1
76	Angle block	1
77	Screw M4 x 10	2
78	Groove cam	1
79	Automatic Feed Lever	1
80	Shaft	1
81	Feeding gear 11T/54T	1
82	Feeding gear 24T	1
83	Screw M6 x 10	4
84a	Wheel (Tailstock Quill Control)	1
84b	Wheel (Feed Control)	1
85	Knob	2
86A	Cross Slide Crank	1
86B	Compound Rest Crank	1
87	Dial	2
88	Bracket	1
89	Feeding screw	1
90	Nut M5	4
91	Screw M6 x 12	6
92	Slide plate	2
93	Carriage	1
94	Gib strip	1
95	Feeding nut imperial	1
96	Swivel disk	1
97	Screw M8 x 20	6
98	Nut M4	6
99	Screw M4 x 16	3
100	Cross slide	1
101	Screw M5 x 10	2
102	Screw M4 x 8	1
105	Compound rest (B)	1
106	Screw M4 x 14	3
107	Gib strip	1
108	Compound rest (A)	1
109	Position pin	1
110	Tool Post Bolt M6 x 25	8
111	Tool Post lever	1
112	Tool Post	1
113	Stud M10 x 65	1
114	Cross feed screw	1
115	Bracket	1
116	Screw M4 x 12	2
119	Nut M18	2
120	Model label	1
121	Dial indicator label	1
122	Control Panel	1
123	Control box	1
124	Power Cord	1
125	Rubber foot	4
126	Chip tray	1
127	Bracket	1
***Not shown on Assembly Diagrams.**		

PARTS LIST (Continued)

Part	Description	Qty
128	Key M3 x 16	1
129	Lead screw	1
131	Bracket	1
133	Screw M3 x 10	3
134	Rack	1
135	Clamp plate	1
136	Washer M10	1
137	Screw M5 x 16	1
138	Tailstock	1
139	Tailstock screw	1
140	Bracket	1
141	Screw M4 x 10	2
142	Tailstock quill	1
143	Live Center	1
144	Stud M8 x 40	1
145	Clamp	1
146	Tailstock Quill Fix Holder	1
148	Pulley	1
150	Motor	1
151	Motor Cover	1
152	Cable Roller	1
153	Rear splash guard	1
157*	Gear 30T	1
158*	Gear 35T	1
159*	Gear 40T	2
160*	Gear 45T	1
161*	Gear 50T	1
162*	Gear 55T	1
163*	Gear 57T	1
164*	Gear 60T	1
165*	Gear 65T	1
166*	External Jaw Set	1
167*	Chuck Key	1
168*	Internal Jaw Set	1
170	Screw M4 x 8	1
171	Clamp block	1
172	Check ring 8	1
173	Screw M5 x 10	4
174	Protector	1
175	Screw M5 x 10	2
176	Nut M6	2
177	Screw M6 x 25	2
178	Power switch	1
179	Fuse Holder	1
180	Speed Control Knob	1
181	Forward/OFF/Reverse Switch	1
182	PC board	1
184	Screw M5 x 10	1
185	Spring washer 5	1
186	Washer 5	1
187	Key 3*16	1
188	Spacer	1
190	Spring	2
191	Washer 8	1

Part	Description	Qty
192	Spring washer	2
193	Screw M8 x 55	2
194	Screw M4 x 38	1
195	Nut M4	1
196	Tailstock plate	1
197	Screw M5 x 16	1
198	Flange	1
199	Screw M5 x 25	1
200	Key 3 x 12	1
201	Chuck Guard	1
202	Hinge	1
205	Spring washer 6	1
206	Big washer 6	1
207	Spring	1
208	Washer 6	1
209	Screw M3 x 4	4
210	Switch cover	1
211	Screw M5 x 16	2
212	Fixed cover	1
235	Protective cover	1
236	Slotted screw	1
237	Compression spring	1
238	Screw M6 x 30	1
239	Small washer 6	1
240	Hexagon nut M6	1
251	Pin	1
252	Rotate plate	1
253	Screw 2.9 x 4.5	2
254	Cover	1
255	Micro Switch	1
256	Dustproof sleeve	1
257	Protective Cover for Leadscrew	1
258	Screw M5 x 8	3
265	Spring Washer 6	2
266	Big Washer 6	2
267	Screw M6 x 25	2
268	Tailstock Nut M10	1
269	Screw M5 x 14	1
270	Leadscrew Support	1
271	Nut M4	2
272	Protective Cover	1
273	Screw M4 x 6	2
300	Screw	1
301	Label	1
302	Thread Dial Indicator	1
303	Plate	1
304	Screw M6 x 12	1
310*	Oil can	1
311*	L hex wrench set S: 3,4,5,6	1
312*	Double end wrench 8-10	1
313*	Double end wrench 14-17	1
314*	Fuse	1
318*	Carbon brush set	1
***Not shown on Assembly Diagrams.**		

Record Product's Serial Number Here:_____

Note: If product has no serial number, record month and year of purchase instead.

Note: Some parts are listed and shown for illustration purposes only, and are not available individually as replacement parts.

ASSEMBLY DIAGRAM

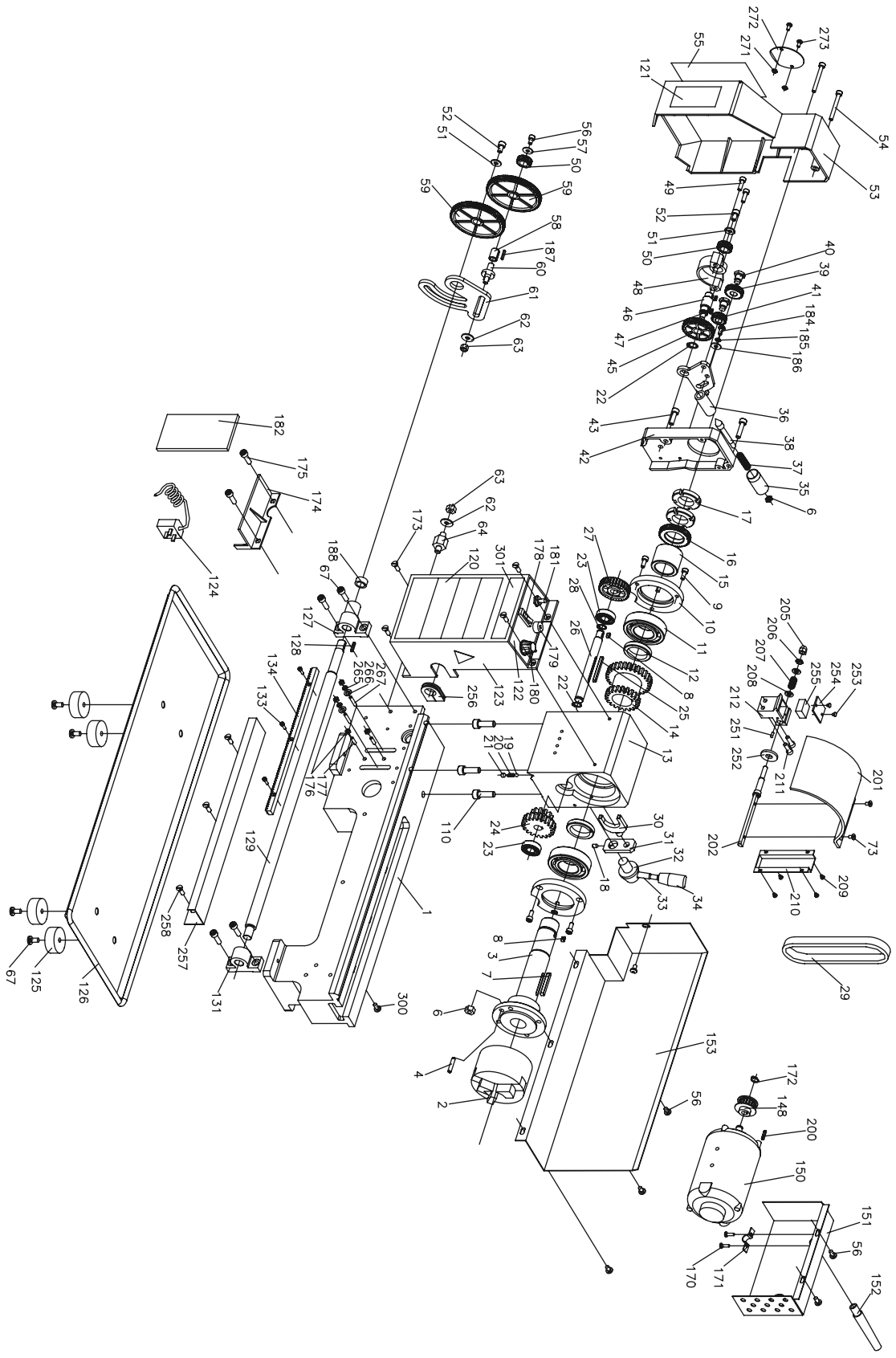

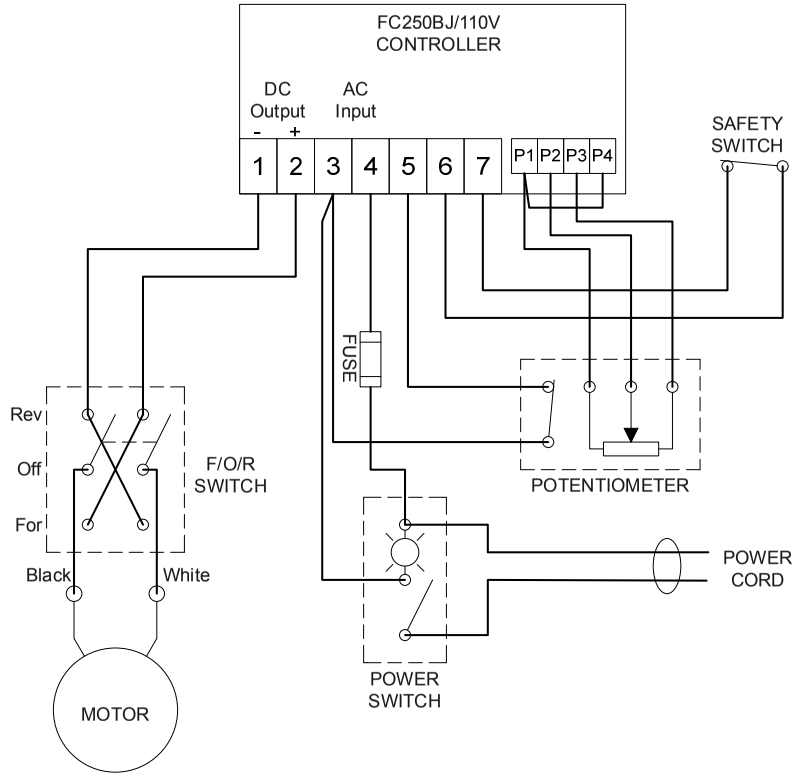

WIRING DIAGRAM

ASSEMBLY DIAGRAM (cONTINUED)

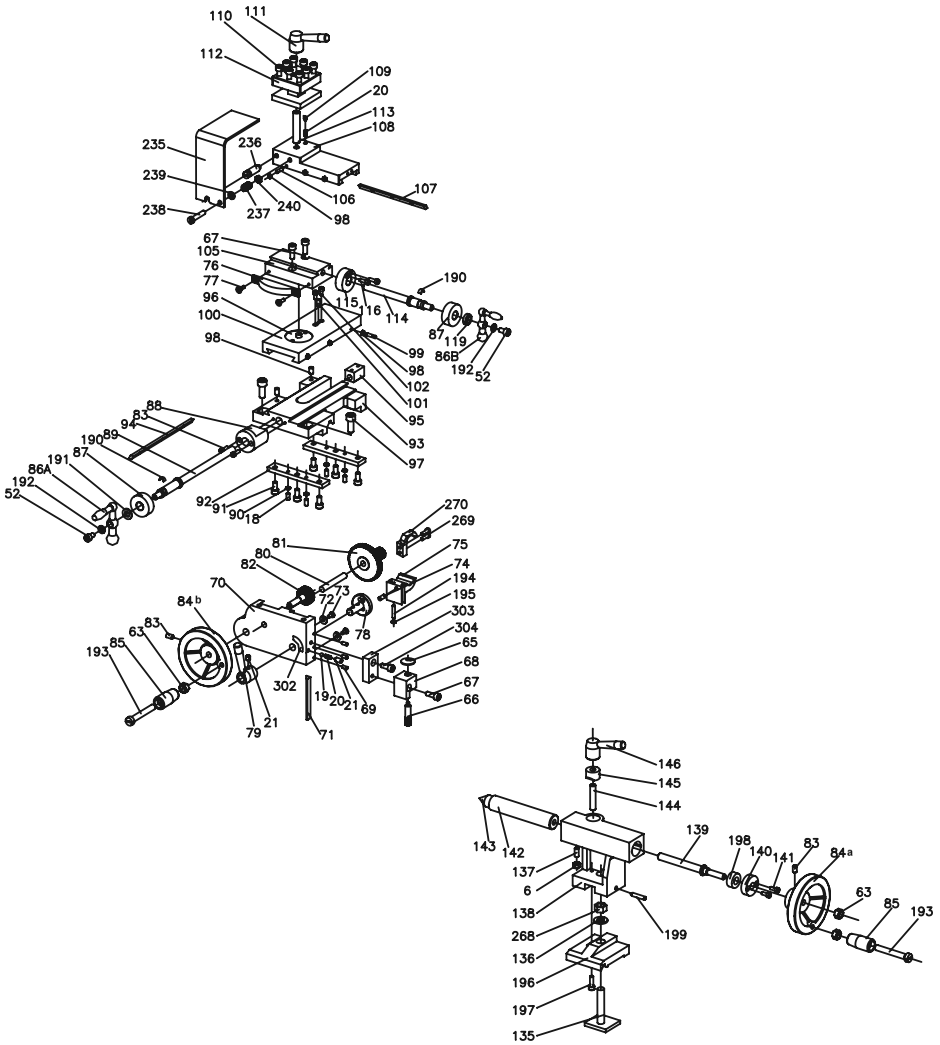

LIMITED 90 DAY WARRANTY

Harbor Freight Tools Co. makes every effort to assure that its products meet high quality and durability standards, and warrants to the original purchaser that this product is free from defects in materials and workmanship for the period of 90 days from the date of purchase. This warranty does not apply to damage due directly or indirectly, to misuse, abuse, negligence or accidents, repairs or alterations outside our facilities, criminal activity, improper installation, normal wear and tear, or to lack of maintenance. We shall in no event be liable for death, injuries to persons or property, or for incidental, contingent, special or consequential damages arising from the use of our product. Some states do not allow the exclusion or limitation of incidental or consequential damages, so the above limitation of exclusion may not apply to you. THIS WARRANTY IS EXPRESSLY IN LIEU OF ALL OTHER WARRANTIES, EXPRESS OR IMPLIED, INCLUDING THE WARRANTIES OF MERCHANTABILITY AND FITNESS.

To take advantage of this warranty, the product or part must be returned to us with transportation charges prepaid. Proof of purchase date and an explanation of the complaint must accompany the merchandise. If our inspection verifies the defect, we will either repair or replace the product at our election or we may elect to refund the purchase price if we cannot readily and quickly provide you with a replacement. We will return repaired products at our expense, but if we determine there is no defect, or that the defect resulted from causes not within the scope of our warranty, then you must bear the cost of returning the product.

This warranty gives you specific legal rights and you may also have other rights which vary from state to state.



3491 Mission Oaks Blvd. • PO Box 6009 • Camarillo, CA 93011 • 1-888-866-5797